REVISIONS			
REV.	DESCRIPTION	DATE	APPROVED

DIY Hay Bale Unroller and Transporter - BALE BUGGY

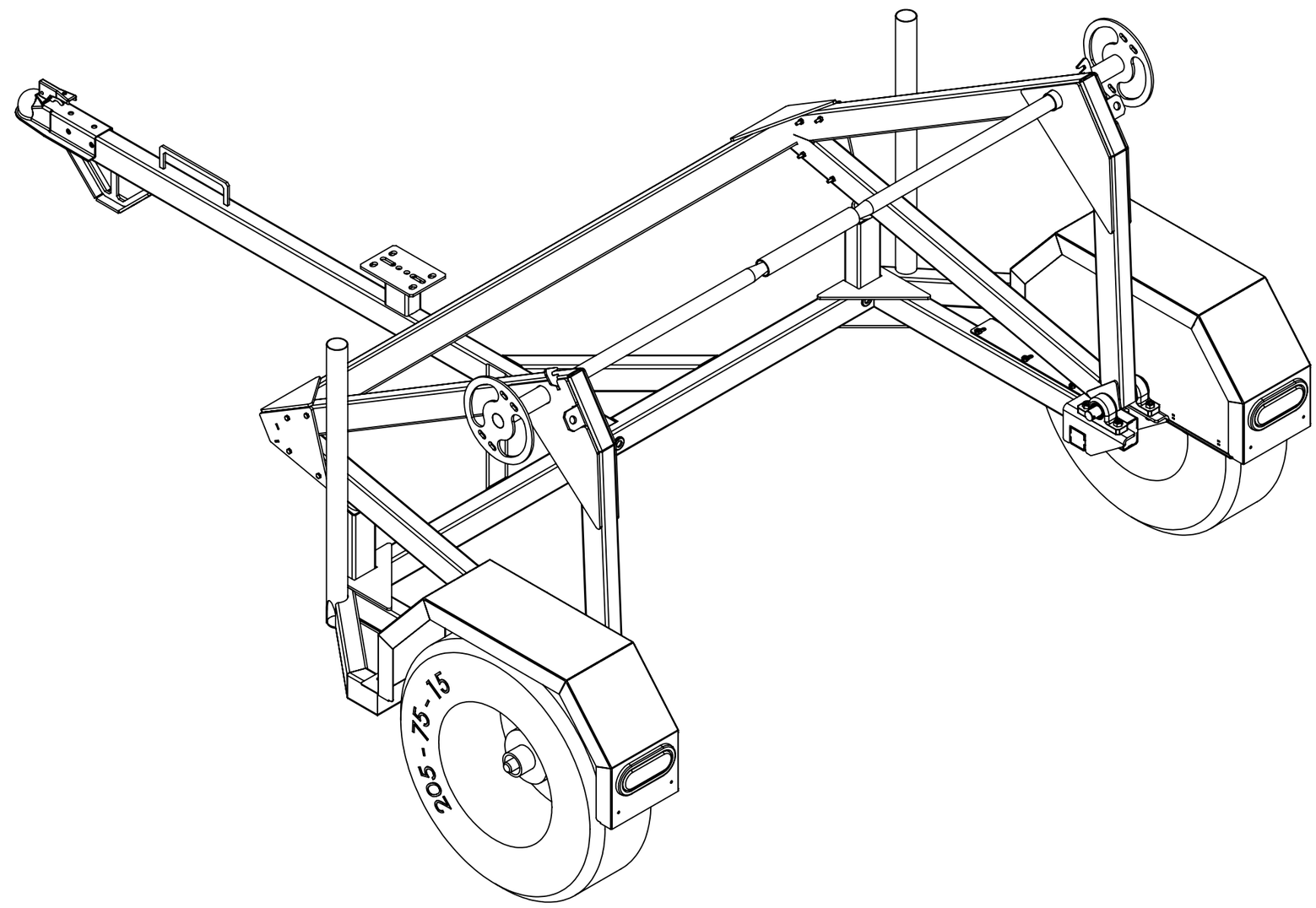

TEXAS METAL WORKS
101 INDUSTRIAL CT, CONROE, TX 77301
PH: 281-238-9652

UNLESS OTHERWISE SPECIFIED
DIMENSIONS ARE IN INCHES
TOLERANCES:
FRACTIONAL ±1/16
ANGULAR: BEND ±1° MACH ±0.5°
DIMENSIONAL TOLERANCE ± 0.015
DO NOT SCALE DRAWING

	NAME	DATE
DRAWN	Noe F	10/15/25
CHECKED		
MFG. APPR.		
Q.A. APPR.		

COMMENTS :

PART # HAYB-000-000
P/N REV : A-1
DWG. VER : 1
SO# :

DESCRIPTION : Hay Bale Trailer
MATERIAL : N/A
ROUTING :
CUSTOMER : STD. PRODUCT

PROPRIETARY AND CONFIDENTIAL : THE INFORMATION CONTAINED IN THIS DRAWING IS THE SOLE PROPERTY OF TEXAS METAL WORKS. ANY REPRODUCTION, IN PART OR AS A WHOLE, WITHOUT WRITTEN PERMISSION OF TEXAS METAL WORKS IS PROHIBITED.

WARNING

SAFETY WARNING: WELDING INVOLVED

Before you begin the assembly process, it's crucial to understand the risks and necessary precautions associated with welding. Please read and adhere to the following safety guidelines:

- **Professional Supervision:** If you're inexperienced in welding, consider seeking guidance or supervision from a trained professional. A small error can have significant consequences on the durability and safety of your furniture.
- **Protective Gear:** Welding can produce intense UV light, sparks, and spatter. Always use a welding helmet with the correct shade of lens, wear flame-resistant clothing, leather gloves, and safety boots. Safety glasses should be worn underneath the helmet for added eye protection.
- **Work in a Safe Environment:** Welding can produce harmful fumes and gases. Always work in a well-ventilated space, preferably outdoors. Remove any flammable materials from the vicinity, and always have a fire extinguisher on hand.
- **Pre-welding Inspection:** Thoroughly inspect the metal parts for any signs of damage, rust, or contamination. Clean the areas to be welded to ensure there are no oils, paints, or other materials that might interfere with the weld.
- **Equipment Check:** Before you start, ensure your welding machine is in proper working condition. Check cables, connectors, and welding gun for any damage or wear.
- **Avoid Water:** Never weld in wet conditions or touch the welding equipment with wet hands or gloves. Water is a conductor of electricity and can increase the risk of shocks.
- **Grounding:** Ensure that the piece you're welding is correctly grounded. A proper ground connection is essential for safety and for producing quality welds.
- **Post-welding Protocol:** Once you finish welding, let the welded parts cool down gradually. Rapid cooling can lead to metal warpage or structural weaknesses.
- **Stay Informed:** Familiarize yourself with the Material Safety Data Sheet (MSDS) for the metals you're working with and the filler materials you're using.
- **First Aid:** Keep a first aid kit nearby. In case of minor burns, immediately hold the affected area under cold running water for at least 10 minutes.
- **Limit Distractions:** Ensure that your workspace is free from unnecessary distractions. Focus is critical when welding to maintain consistent quality and safety.
- **Store Equipment Safely:** After completion, store your welding equipment in a dry, safe place away from children's reach.

Remember, your safety and the quality of your work go hand in hand. Always prioritize safety precautions and never rush the welding process. If you're ever uncertain about a step or safety measure, seek guidance before proceeding.

Your safety is our top priority! No task justifies risking injury.

PROPRIETARY AND CONFIDENTIAL : THE INFORMATION CONTAINED IN THIS DRAWING IS THE SOLE PROPERTY OF TEXAS METAL WORKS. ANY REPRODUCTION, IN PART OR AS A WHOLE, WITHOUT WRITTEN PERMISSION OF TEXAS METAL WORKS IS PROHIBITED.

ITEM	PART NUMBER	DESCRIPTION	Material Gauge	MATERIAL	REV	QTY.
1	.25" nut	0.25"-20 - Steel Hex Nut		Steel	A-1	8
2	.25"- 3" Bolt	Hex Screw 0.25" - 3		Steel	A-1	8
3	.25"-.75" Bolt	Hex Screw 0.25" - 0.75"		Steel	A-1	2
4	.38 - .75" Bolt	Hex Head Screw - 3/8" -- 0.75" Long		Steel	A-1	10
5	.5" - 1.5" Bolt	Hex Head Screw - 0.5", 1.5" Length		Steel	A-1	8
6	0.5" Safety Nut	Steel Nylon-Insert Locknut 0.5"		Steel		8
7	1001-010-000	Projection Weld Nut - .25-20		Steel	A-1	2
8	1001-015-001	Steel Rivet Nut - 3/8"-16		ASTM A36 Steel	A-1	10
9	205 - 75 - 15	205/75/r15 Wheel and Tire			A-1	2
10	2938T25	High-Load Oil-Embedded Sleeve Bearing		863 Iron-Copper		4
11	6.5 Oval Light	6.5" Oval Trailer Tail Light			A-1	2
12	Clevis Pin - 1" - 6.25"	Steel Clevis Pin - 1" by 6-1/4"		1004-1045 Carbon Steel		2
13	Grommet 1"	Grommet 1" Drill Hole		SBR Rubber		6
14	HAYB-050-000	Hay Bale Trailer - Tongue	2x3_0.12"	ASTM A36 Steel	A-1	1
15	HAYB-050-001	Hay Bale Trailer - Tongue Reinforcement	2x3_0.12"	ASTM A36 Steel	A-1	2
16	HAYB-050-002	Hay Bale Trailer - Left Side	2x3_0.12"	ASTM A36 Steel	A-1	1
17	HAYB-050-003	Hay Bale Trailer - Mid Cross Member	2x3_0.12"	ASTM A36 Steel	A-1	1
18	HAYB-050-004	Hay Bale Trailer - Upright Left	2x3_0.12"	ASTM A36 Steel	A-1	1
19	HAYB-050-005	Hay Bale Trailer - Upright Cap	0.135"	ASTM A36 Steel	A-1	2
20	HAYB-050-006	Hay Bale Trailer - Upright Right	2x3_0.12"	ASTM A36 Steel	A-1	1
21	HAYB-050-007	Hay Bale Trailer - Right Side	2x3_0.12"	ASTM A36 Steel	A-1	1
22	HAYB-051-000	Hay Bale Trailer - Tube Cap 3x2	0.135"	ASTM A36 Steel	A-1	3
23	HAYB-051-001	Hay Bale Trailer - Tube Cap 2x2	0.135"	ASTM A36 Steel	A-1	2
24	HAYB-052-000	Hay Bale Trailer - Winch Mount Tube	2x3_0.12"	ASTM A36 Steel	A-1	1
25	HAYB-052-001	Hay Bale Trailer - Winch Mount Plate	0.25"	ASTM A36 Steel	A-1	1
26	HAYB-053-000	Hay Bale Trailer - Spindle Sleeve	2x2_0.12"	ASTM A36 Steel	A-1	2
27	HAYB-054-000	Hay Bale Trailer - Spindle Adapter Plate	0.25"	ASTM A36 Steel	A-1	2
28	HAYB-055-000	Hay Bale Trailer - Tongue Handle	0.25"	ASTM A36 Steel	A-1	1
29	HAYB-056-000	Hay Bale Trailer - Pitchfork Holder Bottom Cap	0.135"	ASTM A36 Steel	A-1	2
30	HAYB-057-000	Hay Bale Trailer - Pitchfork Holder Tube	Round 2x0.065"	ASTM A36 Steel	A-1	2
31	HAYB-058-000	Hay Bale Trailer - Cow Spreader Tube	2x3_0.12"	ASTM A36 Steel	A-1	2
32	HAYB-059-000	Hay Bale Trailer - Bearing Mount	6x6x0.25	ASTM A36 Steel	A-1	2
33	HAYB-060-000	Hay Bale Trailer - Tongue Leg - Mid Plate	0.25	ASTM A36 Steel	A-1	1
34	HAYB-060-001	Hay Bale Trailer - Tongue Leg - Side Plate	0.25	ASTM A36 Steel	A-1	2
35	HAYB-060-002	Hay Bale Trailer - Tongue Leg - Bot Plate	0.25	ASTM A36 Steel	A-1	1
36	HAYB-061-000	Hay Bale Trailer - D-Ring CrossBar	2x3_0.12"	ASTM A36 Steel	A-1	1
37	HAYB-062-000	Hay Bale Trailer - CrossBar Gusset	0.25"	ASTM A36 Steel	A-1	2
38	HAYB-063-000	Hay Bale Trailer - Scissor - Front	2x3_0.12	ASTM A36 Steel	A-1	2
39	HAYB-063-001	Hay Bale Trailer - Scissor - Tube Cap	0.135	ASTM A36 Steel	A-1	2
40	HAYB-063-002	Hay Bale Trailer - Scissor - Drag	2x3_0.12	ASTM A36 Steel	A-1	2
41	HAYB-064-000	Hay Bale Trailer - Gusset 8in	0.25"	ASTM A36 Steel	A-1	4
42	HAYB-064-001	Hay Bale Trailer - Gusset 8in - Cutout	0.25"	ASTM A36 Steel	A-1	2
43	HAYB-065-000	Hay Bale Trailer - Chain Holder	0.25"	ASTM A36 Steel	A-1	2
44	HAYB-066-000	Hay Bale Trailer - Skewer Sleeve	DOM 1.75X0.12"	ASTM A36 Steel	A-1	2
45	HAYB-066-001	Hay Bale Trailer - Skewer Sleeve - Alignment Tool	DOM 1.75X0.12"	ASTM A36 Steel	A-1	1
46	HAYB-067-000	Hay Bale Trailer - Scissor Reinforcement	0.25"	ASTM A36 Steel	A-1	4
47	HAYB-068-000	Hay Bale Trailer - Chain Retainer Hook	0.25"	ASTM A36 Steel	A-1	2
48	HAYB-069-000	Hay Bale Trailer - D Ring Reinforcement Plate	0.25"	ASTM A36 Steel	A-1	1
49	HAYB-070-000	Hay Bale Trailer - Scissor Upper Reinforcement Inside	0.25"	ASTM A36 Steel	A-1	2
50	HAYB-070-001	Hay Bale Trailer - Scissor Upper Reinforcement Outside	0.25"	ASTM A36 Steel	A-1	2
51	HAYB-071-000	Hay Bale Trailer - Skewer	1 7/16" Solid bar	ASTM A36 Steel	A-1	2
52	HAYB-072-000	Hay Bale Trailer - Skewer Handle	0.25"	ASTM A36 Steel	A-1	2
53	HAYB-073-000	Hay Bale Trailer - Fender Right	0.075"	ASTM A36 Steel	A-1	1
54	HAYB-073-001	Hay Bale Trailer - Fender Left	0.075"	ASTM A36 Steel	A-1	1
55	HAYB-073-002	Hay Bale Trailer - Fender Base - Right	0.1345"	ASTM A36 Steel	A-1	1
56	HAYB-073-003	Hay Bale Trailer - Fender Base - Left	0.1345"	ASTM A36 Steel	A-1	1
57	HAYB-074-000	Hay Bale Trailer - Steel Washer 1" ID, 2" OD	0.1345	18-8 Stainless Steel	A-1	2
58	Hitch Coupler	Hitch-Ball Coupler				1
59	PGN UCP205-16	Pillow Block Bearing - 1" Diameter				4
60	Rubber Bumper	2.25" Diameter 0.75" Thick - Rubber Bumper		SRS Rubber	A-1	2
61	Tie Down Ring	Weld-on Tie-Down Ring		ASTM A36 Steel		1
62	WeldOn - Spindle	Weld On Spindle - 1.5" Shaft		ASTM A36 Steel	A-1	2
63	Wheel Hub	5 Lug On 4-1/2" - Wheel Hub		ASTM A36 Steel	A-1	2

ALL PARTS BOM

TEXAS METAL WORKS
101 INDUSTRIAL CT, CONROE, TX 77301
PH: 281-238-9652

UNLESS OTHERWISE SPECIFIED
DIMENSIONS ARE IN INCHES
TOLERANCES:
FRACTIONAL ±1/16
ANGULAR: BEND ±1° MACH ±0.5°
DIMENSIONAL TOLERANCE ± 0.015
DO NOT SCALE DRAWING

	NAME	DATE
DRAWN	Noe F	10/15/25
CHECKED		
MFG. APPR.		
Q.A. APPR.		

COMMENTS :

PART # HAYB-000-000
P/N REV : A-1
DWG. VER : 1
SO# :

DESCRIPTION : Hay Bale Trailer
MATERIAL : N/A
ROUTING :
CUSTOMER : STD. PRODUCT

PROPRIETARY AND CONFIDENTIAL : THE INFORMATION CONTAINED IN THIS DRAWING IS THE SOLE PROPERTY OF TEXAS METAL WORKS. ANY REPRODUCTION, IN PART OR AS A WHOLE, WITHOUT WRITTEN PERMISSION OF TEXAS METAL WORKS IS PROHIBITED.

ASSEMBLY BOM

ITEM	PART NUMBER	DESCRIPTION	REV	QTY.
1	.25"-.75" Bolt	Hex Screw 0.25" - 0.75"	A-1	2
2	.38 - .75" Bolt	Hex Head Screw - 3/8" -- 0.75" Long	A-1	10
3	.5" - 1.5" Bolt	Hex Head Screw - 0.5", 1.5" Length	A-1	8
4	0.5" Safety Nut	Steel Nylon-Insert Locknut 0.5"		8
5	205 - 75 - 15	205/75/r15 Wheel and Tire	A-1	2
6	6.5 Oval Light	6.5" Oval Trailer Tail Light	A-1	2
7	Clevis Pin - 1" - 6.25"	Steel Clevis Pin - 1" by 6-1/4"		2
8	Grommet 1"	Grommet 1" Drill Hole		6
9	HAYB-001-000	Hay Bale Trailer - Frame Weldment	A-1	1
10	HAYB-002-000	Hay Bale Trailer -Scissor Weldment	A-1	1
11	HAYB-003-000	Hay Bale Trailer -Skewer Weldment	A-1	2
12	HAYB-004-000	Hay Bale Trailer - Fender Weldment - Right	A-1	1
13	HAYB-004-001	Hay Bale Trailer - Fender Weldment - Left	A-1	1
14	HAYB-066-001	Hay Bale Trailer - Skewer Sleeve - Alignment Tool	A-1	1
15	HAYB-074-000	Hay Bale Trailer - Steel Washer 1" ID, 2" OD	A-1	2
16	Hitch Coupler	Hitch-Ball Coupler		1
17	PGN UCP205-16	Pillow Block Bearing - 1" Diameter		4
18	Rubber Bumper	2.25" Diameter 0.75" Thick - Rubber Bumper	A-1	2

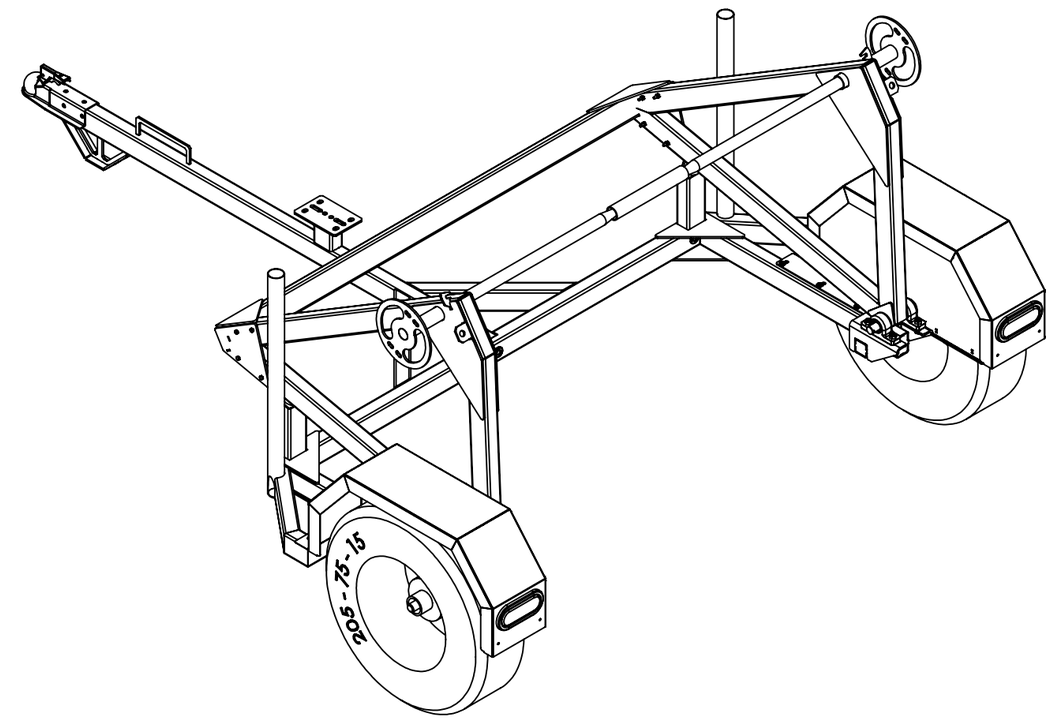

TEXAS METAL WORKS
101 INDUSTRIAL CT, CONROE, TX 77301
PH: 281-238-9652

UNLESS OTHERWISE SPECIFIED
DIMENSIONS ARE IN INCHES
TOLERANCES:
FRACTIONAL ±1/16
ANGULAR: BEND ±1° MACH ±0.5°
DIMENSIONAL TOLERANCE ± 0.015
DO NOT SCALE DRAWING

	NAME	DATE
DRAWN	Noe F	10/15/25
CHECKED		
MFG. APPR.		
Q.A. APPR.		

COMMENTS :

PART # HAYB-000-000
P/N REV : A-1
DWG. VER : 1
SO# :

DESCRIPTION : Hay Bale Trailer
MATERIAL : N/A
ROUTING :
CUSTOMER : STD. PRODUCT

PROPRIETARY AND CONFIDENTIAL : THE INFORMATION CONTAINED IN THIS DRAWING IS THE SOLE PROPERTY OF TEXAS METAL WORKS. ANY REPRODUCTION, IN PART OR AS A WHOLE, WITHOUT WRITTEN PERMISSION OF TEXAS METAL WORKS IS PROHIBITED.

STEP 1

For ease of installation we first need to mount (5) 2X to the wheel hub

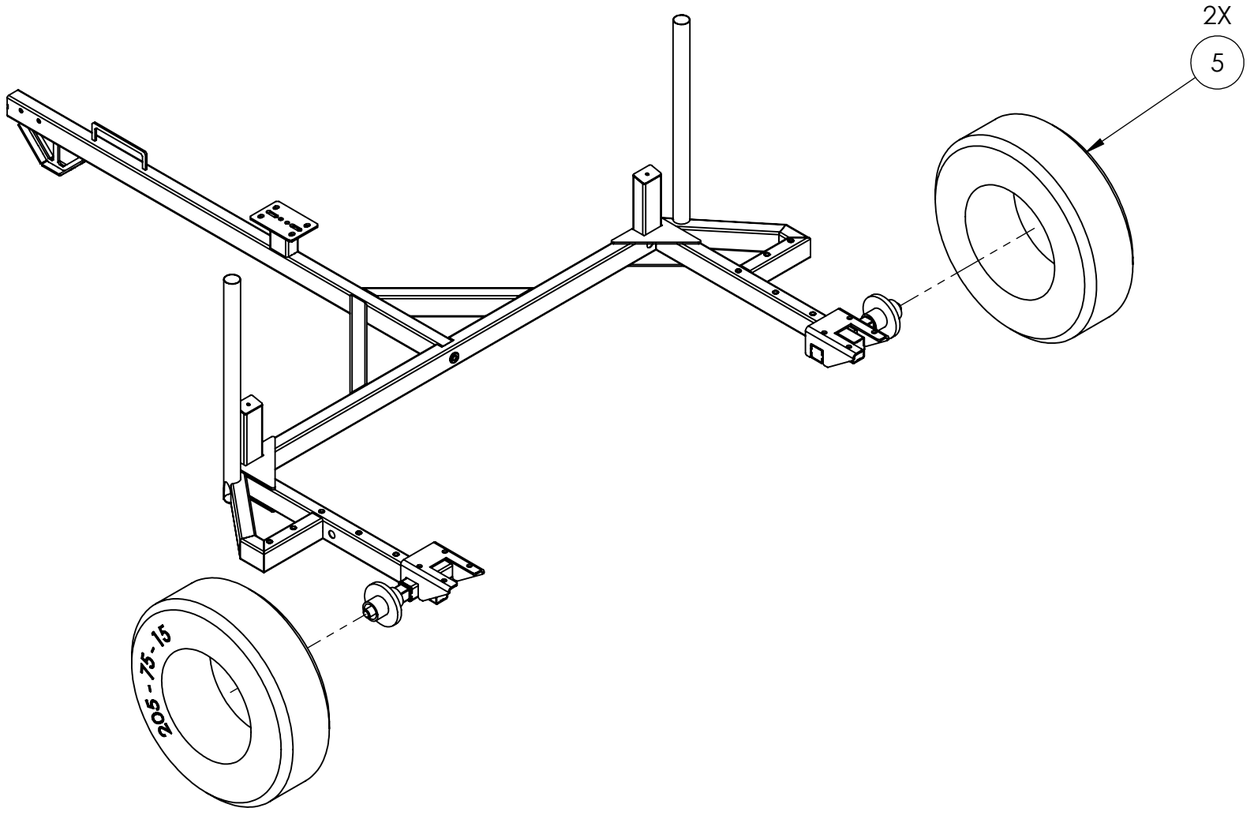

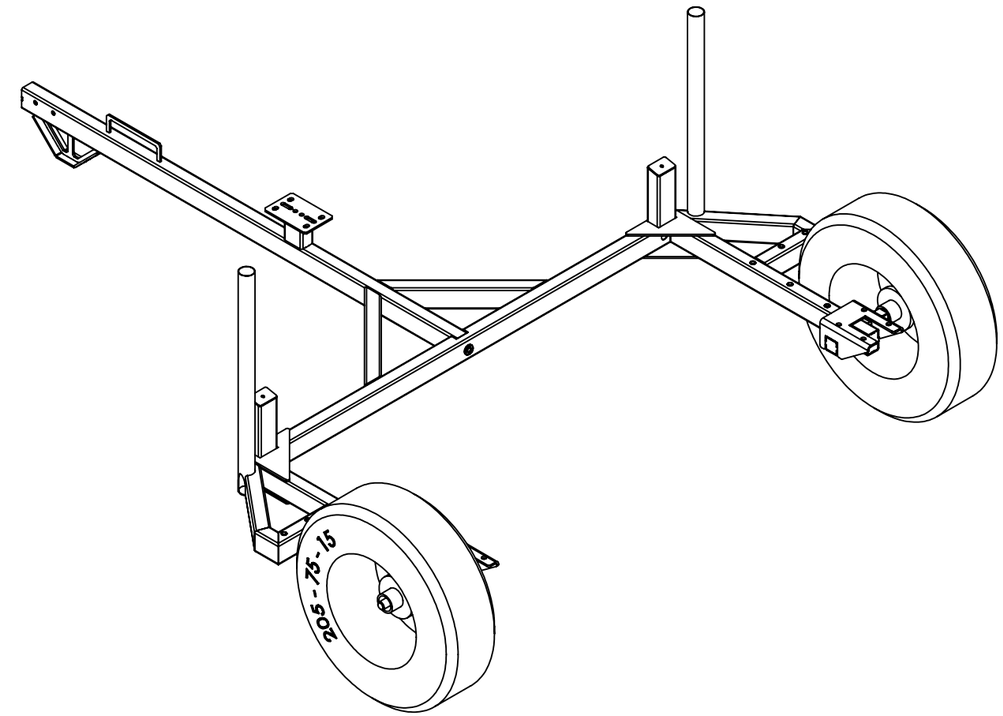

TEXAS METAL WORKS 101 INDUSTRIAL CT, CONROE, TX 77301 PH: 281-238-9652	UNLESS OTHERWISE SPECIFIED DIMENSIONS ARE IN INCHES TOLERANCES: FRACTIONAL ±1/16 ANGULAR: BEND ±1° MACH ±0.5° DIMENSIONAL TOLERANCE ± 0.015 DO NOT SCALE DRAWING		NAME	DATE	COMMENTS :	PART # HAYB-000-000	DESCRIPTION : Hay Bale Trailer
		DRAWN	Noe F	10/15/25		P/N REV : A-1	MATERIAL : N/A
		CHECKED				DWG. VER : 1	ROUTING :
		MFG. APPR.				SO# :	CUSTOMER : STD. PRODUCT
		Q.A. APPR.					

PROPRIETARY AND CONFIDENTIAL : THE INFORMATION CONTAINED IN THIS DRAWING IS THE SOLE PROPERTY OF TEXAS METAL WORKS. ANY REPRODUCTION, IN PART OR AS A WHOLE, WITHOUT WRITTEN PERMISSION OF TEXAS METAL WORKS IS PROHIBITED.

ITEM	PART NUMBER	DESCRIPTION	REV	QTY.
3	.5" - 1.5" Bolt	Hex Head Screw - 0.5", 1.5" Length	A-1	8
4	0.5" Safety Nut	Steel Nylon-Insert Locknut 0.5"		8
17	PGN UCP205-16	Pillow Block Bearing - 1" Diameter		4

STEP 2

Next we need to bolt (17) (4X) using (3) (8X) & (4) (8X), remember not to fully tighten the fasteners yet

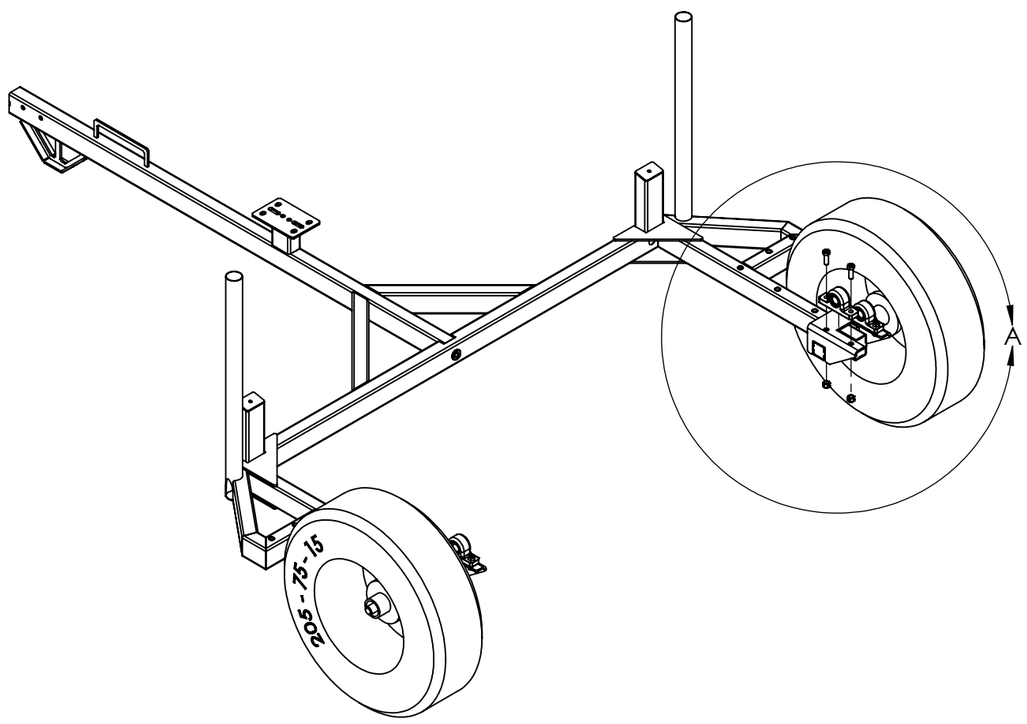

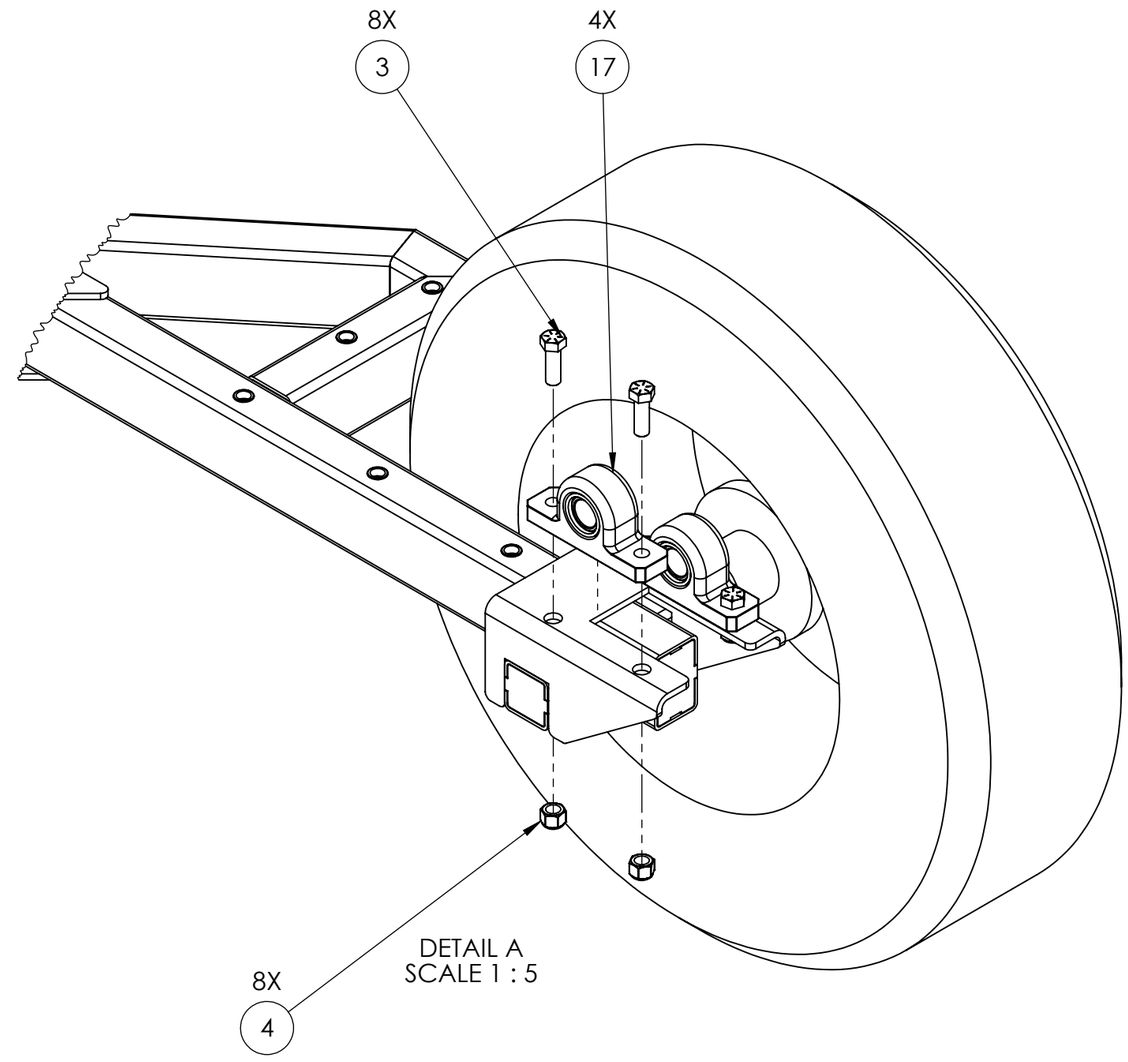

TEXAS METAL WORKS
101 INDUSTRIAL CT, CONROE, TX 77301
PH: 281-238-9652

UNLESS OTHERWISE SPECIFIED
DIMENSIONS ARE IN INCHES
TOLERANCES:
FRACTIONAL ±1/16
ANGULAR: BEND ±1° MACH ±0.5°
DIMENSIONAL TOLERANCE ± 0.015
DO NOT SCALE DRAWING

	NAME	DATE
DRAWN	Noe F	10/15/25
CHECKED		
MFG. APPR.		
Q.A. APPR.		

COMMENTS :

PART # HAYB-000-000
P/N REV : A-1
DWG. VER : 1
SO# :

DESCRIPTION : Hay Bale Trailer
MATERIAL : N/A
ROUTING :
CUSTOMER : STD. PRODUCT

PROPRIETARY AND CONFIDENTIAL : THE INFORMATION CONTAINED IN THIS DRAWING IS THE SOLE PROPERTY OF TEXAS METAL WORKS. ANY REPRODUCTION, IN PART OR AS A WHOLE, WITHOUT WRITTEN PERMISSION OF TEXAS METAL WORKS IS PROHIBITED.

ITEM	PART NUMBER	DESCRIPTION	REV	QTY.
1	.25"-.75" Bolt	Hex Screw 0.25" - 0.75"	A-1	2
18	Rubber Bumper	2.25" Diameter 0.75" Thick - Rubber Bumper	A-1	2

STEP 3

Next we need to bolt (18) 2X using (1) 2X

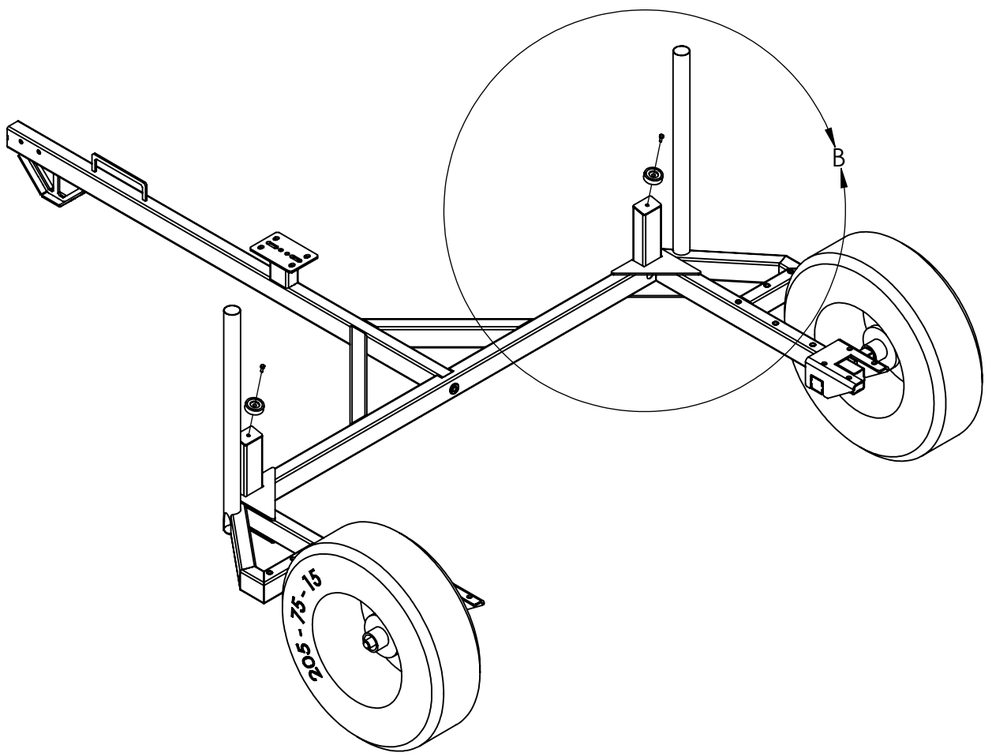

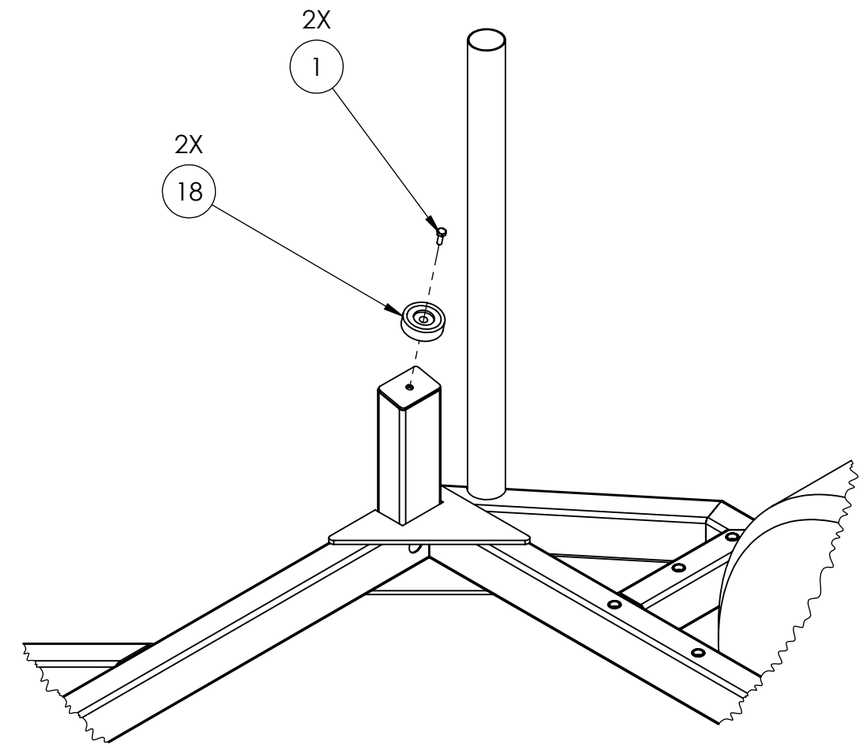

SCALE 1 : 5

TEXAS METAL WORKS
101 INDUSTRIAL CT, CONROE, TX 77301
PH: 281-238-9652

UNLESS OTHERWISE SPECIFIED
DIMENSIONS ARE IN INCHES
TOLERANCES:
FRACTIONAL ±1/16
ANGULAR: BEND ±1° MACH ±0.5°
DIMENSIONAL TOLERANCE ± 0.015
DO NOT SCALE DRAWING

	NAME	DATE
DRAWN	Noe F	10/15/25
CHECKED		
MFG. APPR.		
Q.A. APPR.		

COMMENTS :

PART # HAYB-000-000
P/N REV : A-1
DWG. VER : 1
SO# :

DESCRIPTION : Hay Bale Trailer
MATERIAL : N/A
ROUTING :
CUSTOMER : STD. PRODUCT

PROPRIETARY AND CONFIDENTIAL : THE INFORMATION CONTAINED IN THIS DRAWING IS THE SOLE PROPERTY OF TEXAS METAL WORKS. ANY REPRODUCTION, IN PART OR AS A WHOLE, WITHOUT WRITTEN PERMISSION OF TEXAS METAL WORKS IS PROHIBITED.

ITEM	PART NUMBER	DESCRIPTION	REV	QTY.
8	Grommet 1"	Grommet 1" Drill Hole		6

STEP 4

Time to insert (8) 6X into its designated holes

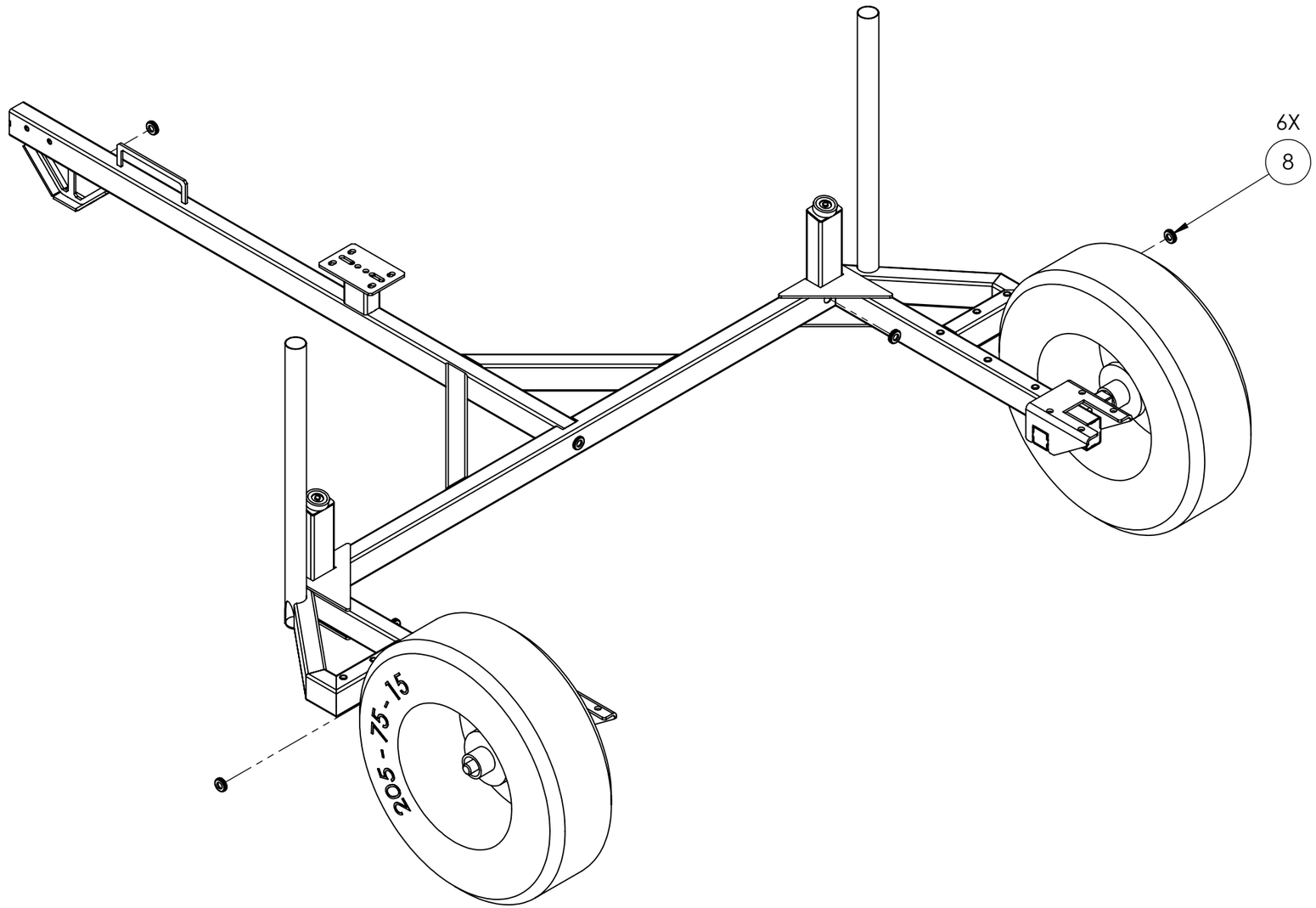

TEXAS METAL WORKS
101 INDUSTRIAL CT, CONROE, TX 77301
PH: 281-238-9652

UNLESS OTHERWISE SPECIFIED
DIMENSIONS ARE IN INCHES
TOLERANCES:
FRACTIONAL ±1/16
ANGULAR: BEND ±1° MACH ±0.5°
DIMENSIONAL TOLERANCE ± 0.015
DO NOT SCALE DRAWING

	NAME	DATE
DRAWN	Noe F	10/15/25
CHECKED		
MFG. APPR.		
Q.A. APPR.		

COMMENTS :

PART # HAYB-000-000
P/N REV : A-1
DWG. VER : 1
SO# :

DESCRIPTION : Hay Bale Trailer
MATERIAL : N/A
ROUTING :
CUSTOMER : STD. PRODUCT

PROPRIETARY AND CONFIDENTIAL : THE INFORMATION CONTAINED IN THIS DRAWING IS THE SOLE PROPERTY OF TEXAS METAL WORKS. ANY REPRODUCTION, IN PART OR AS A WHOLE, WITHOUT WRITTEN PERMISSION OF TEXAS METAL WORKS IS PROHIBITED.

ITEM	PART NUMBER	DESCRIPTION	REV	QTY.
7	Clevis Pin - 1" - 6.25"	Steel Clevis Pin - 1" by 6-1/4"		2
15	HAYB-074-000	Hay Bale Trailer - Steel Washer 1" ID, 2" OD	A-1	2

STEP 5

To install the scissor assembly into its place, we need to use (7) 2X and (15) 2X through the assembly and bearings, don't forget the security pin to avoid (7) 2X coming out.
After checking for a smooth movement and no rubbing between pieces and bearings, now it's time to fully tighten previous fasteners

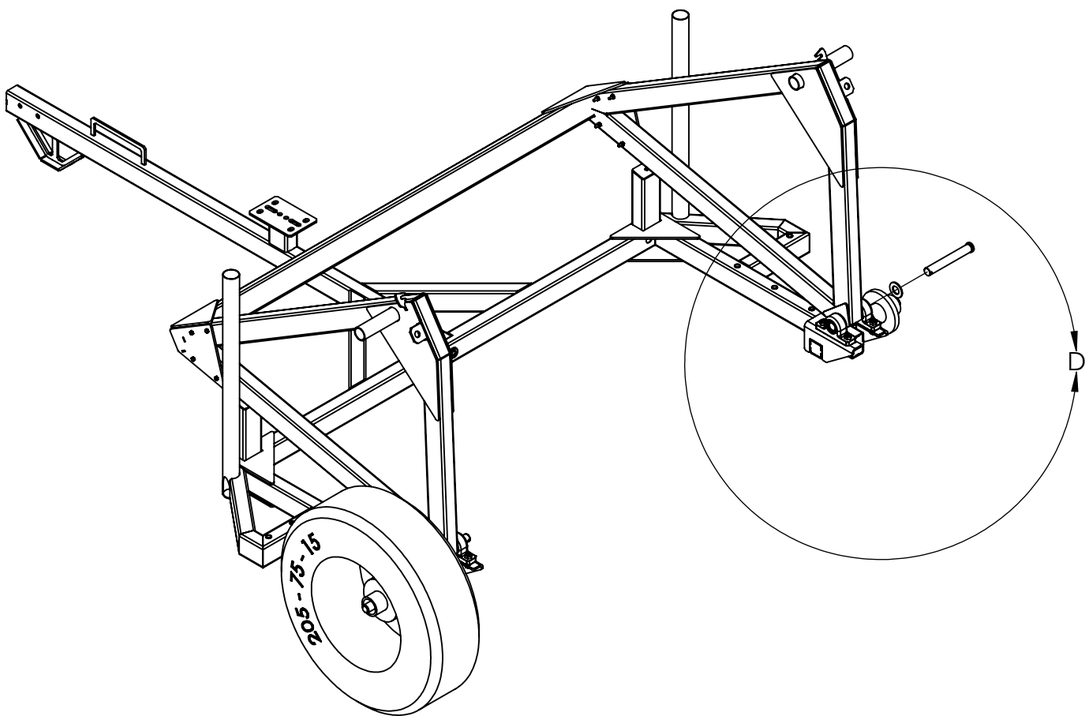

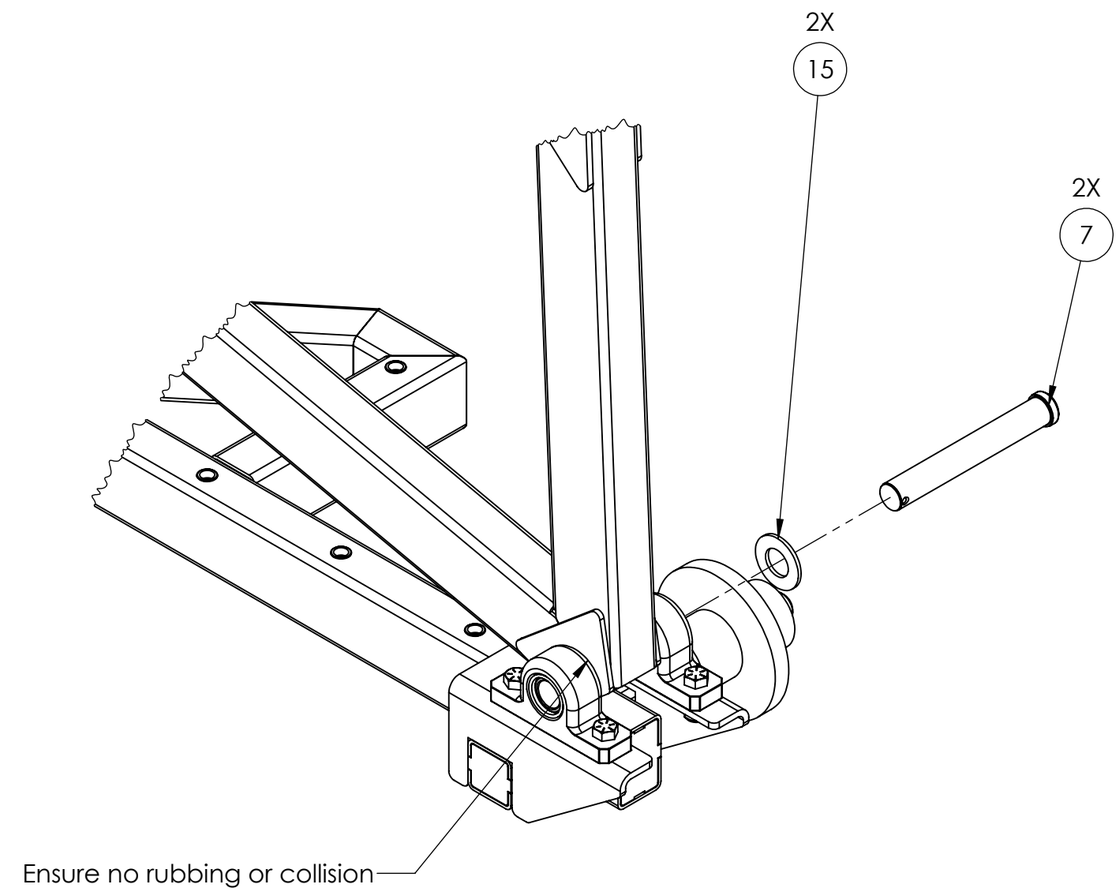

DETAIL D
SCALE 1 : 5

TEXAS METAL WORKS
101 INDUSTRIAL CT, CONROE, TX 77301
PH: 281-238-9652

UNLESS OTHERWISE SPECIFIED
DIMENSIONS ARE IN INCHES
TOLERANCES:
FRACTIONAL ±1/16
ANGULAR: BEND ±1° MACH ±0.5°
DIMENSIONAL TOLERANCE ± 0.015
DO NOT SCALE DRAWING

	NAME	DATE
DRAWN	Noe F	10/15/25
CHECKED		
MFG. APPR.		
Q.A. APPR.		

COMMENTS :

PART # HAYB-000-000
P/N REV : A-1
DWG. VER : 1
SO# :

DESCRIPTION : Hay Bale Trailer
MATERIAL : N/A
ROUTING :
CUSTOMER : STD. PRODUCT

PROPRIETARY AND CONFIDENTIAL : THE INFORMATION CONTAINED IN THIS DRAWING IS THE SOLE PROPERTY OF TEXAS METAL WORKS. ANY REPRODUCTION, IN PART OR AS A WHOLE, WITHOUT WRITTEN PERMISSION OF TEXAS METAL WORKS IS PROHIBITED.

ITEM	PART NUMBER	DESCRIPTION	REV	QTY.
2	.38 - .75" Bolt	Hex Head Screw - 3/8" -- 0.75" Long	A-1	10
6	6.5 Oval Light	6.5" Oval Trailer Tail Light	A-1	2
12	HAYB-004-000	Hay Bale Trailer - Fender Weldment - Right	A-1	1
13	HAYB-004-001	Hay Bale Trailer - Fender Weldment - Left	A-1	1

STEP 6

Time to bolt on and fit (13) & (12) , to do that use the slots in both of them and bolt them directly to the frame using 10X (2)

Also it is time to install 2X (6) and run the wiring along the zip tie holes in both (13) & (12)

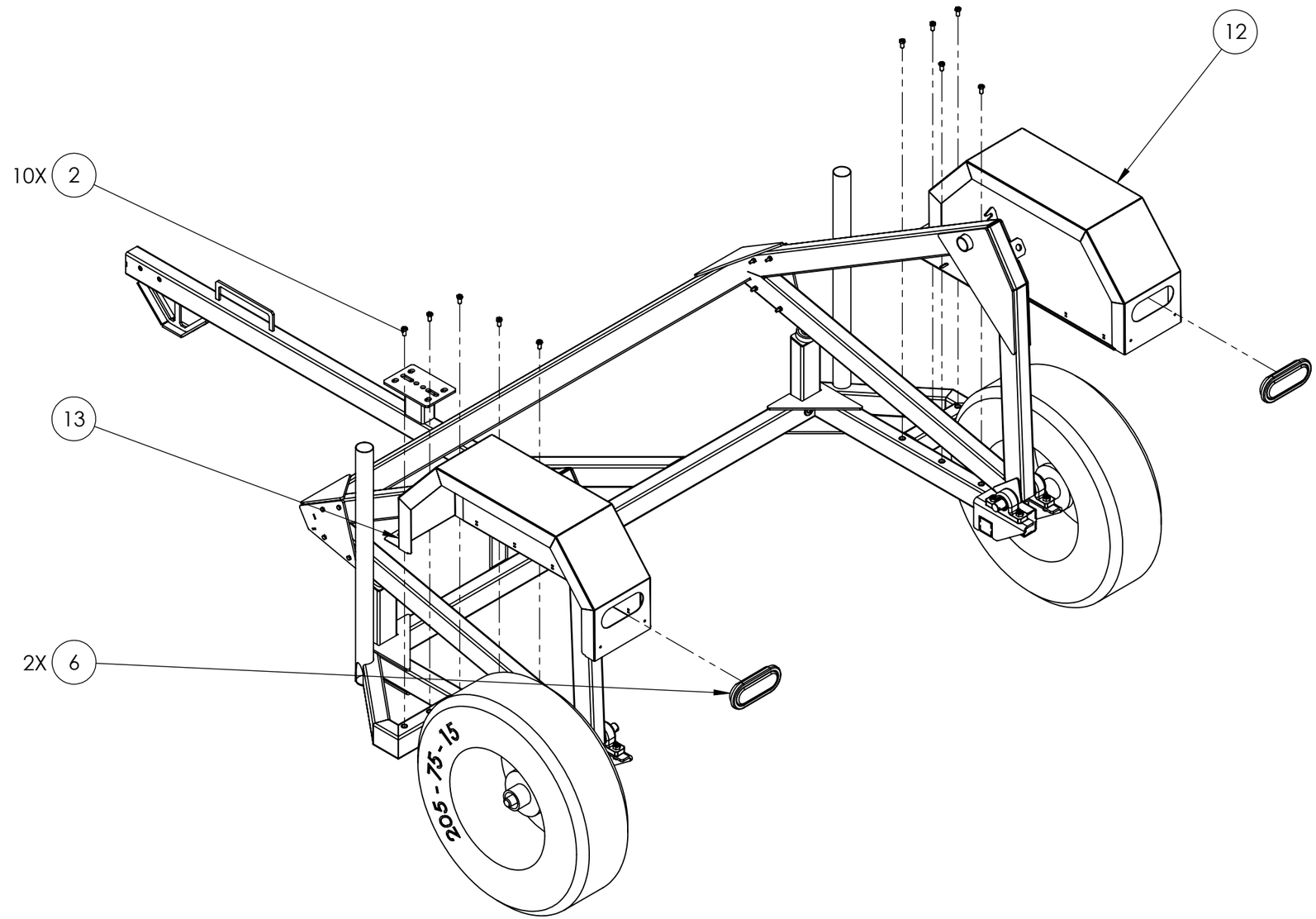

TEXAS METAL WORKS
101 INDUSTRIAL CT, CONROE, TX 77301
PH: 281-238-9652

UNLESS OTHERWISE SPECIFIED
DIMENSIONS ARE IN INCHES
TOLERANCES:
FRACTIONAL ±1/16
ANGULAR: BEND ±1° MACH ±0.5°
DIMENSIONAL TOLERANCE ± 0.015
DO NOT SCALE DRAWING

	NAME	DATE
DRAWN	Noe F	10/15/25
CHECKED		
MFG. APPR.		
Q.A. APPR.		

COMMENTS :

PART # HAYB-000-000
P/N REV : A-1
DWG. VER : 1
SO# :

DESCRIPTION : Hay Bale Trailer
MATERIAL : N/A
ROUTING :
CUSTOMER : STD. PRODUCT

PROPRIETARY AND CONFIDENTIAL : THE INFORMATION CONTAINED IN THIS DRAWING IS THE SOLE PROPERTY OF TEXAS METAL WORKS. ANY REPRODUCTION, IN PART OR AS A WHOLE, WITHOUT WRITTEN PERMISSION OF TEXAS METAL WORKS IS PROHIBITED.

ITEM	PART NUMBER	DESCRIPTION	REV	QTY.
11	HAYB-003-000	Hay Bale Trailer -Skewer Weldment	A-1	2
14	HAYB-066-001	Hay Bale Trailer - Skewer Sleeve - Alignment Tool	A-1	1

STEP 7

Now it's time to slide (11) 2X, and use (14) to align both sides, then finally we can go and fully weld the Skewer Sleeves that we left tack welded

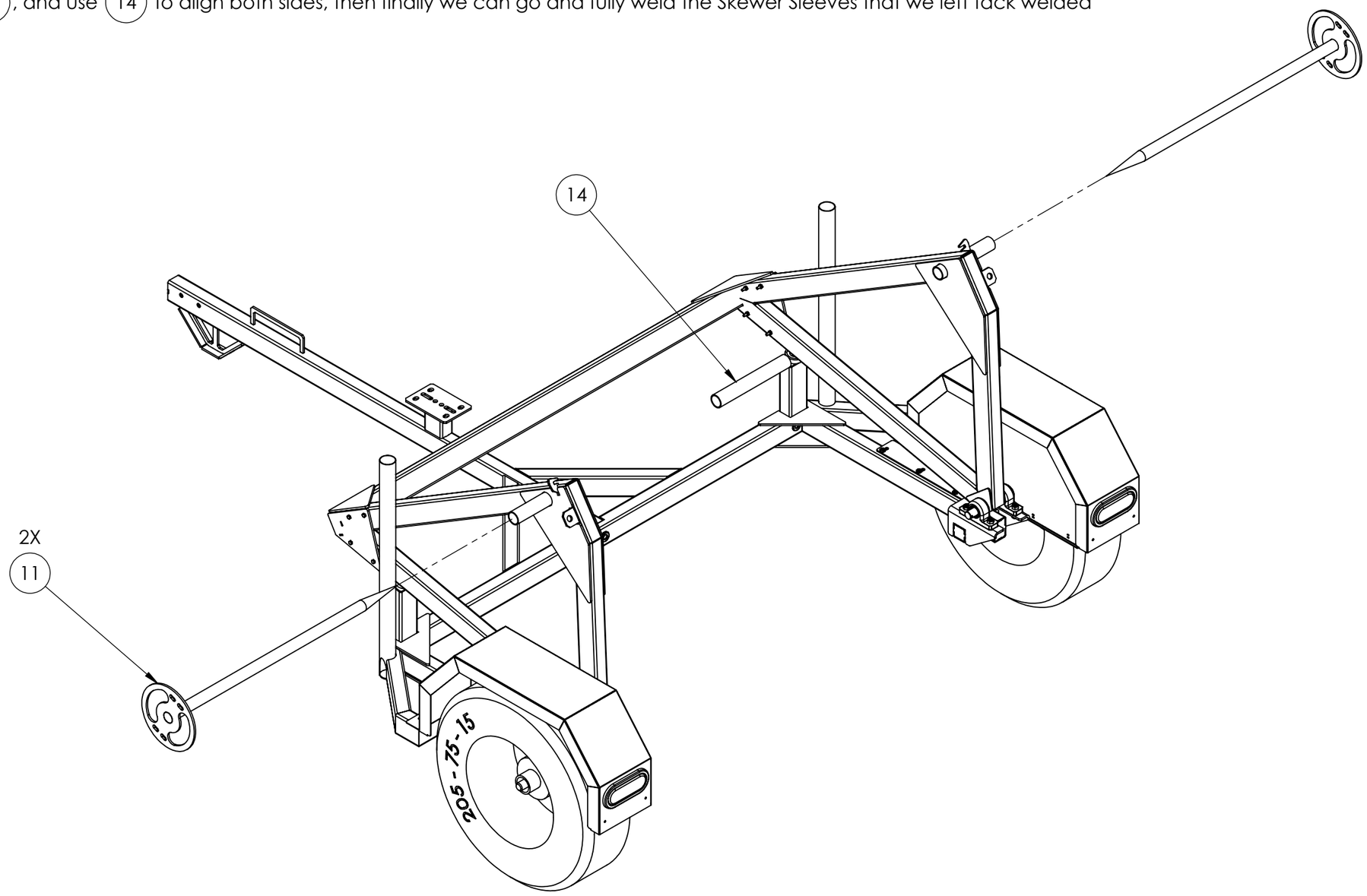

TEXAS METAL WORKS
101 INDUSTRIAL CT, CONROE, TX 77301
PH: 281-238-9652

UNLESS OTHERWISE SPECIFIED
DIMENSIONS ARE IN INCHES
TOLERANCES:
FRACTIONAL ±1/16
ANGULAR: BEND ±1° MACH ±0.5°
DIMENSIONAL TOLERANCE ± 0.015
DO NOT SCALE DRAWING

	NAME	DATE
DRAWN	Noe F	10/15/25
CHECKED		
MFG. APPR.		
Q.A. APPR.		

COMMENTS :

PART # HAYB-000-000
P/N REV : A-1
DWG. VER : 1
SO# :

DESCRIPTION : Hay Bale Trailer
MATERIAL : N/A
ROUTING :
CUSTOMER : STD. PRODUCT

PROPRIETARY AND CONFIDENTIAL : THE INFORMATION CONTAINED IN THIS DRAWING IS THE SOLE PROPERTY OF TEXAS METAL WORKS. ANY REPRODUCTION, IN PART OR AS A WHOLE, WITHOUT WRITTEN PERMISSION OF TEXAS METAL WORKS IS PROHIBITED.

REVISIONS			
REV.	DESCRIPTION	DATE	APPROVED

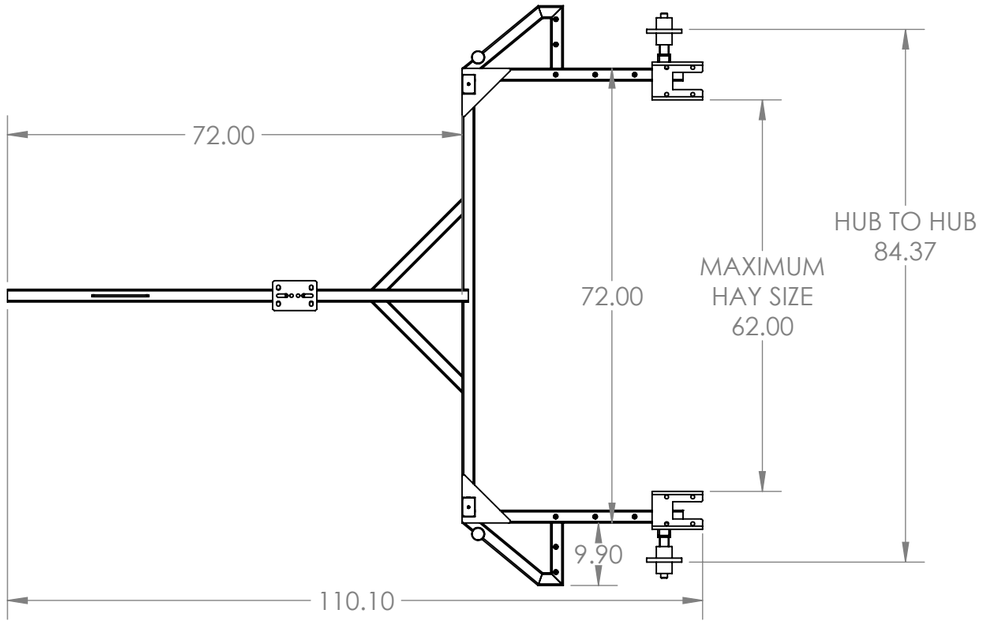

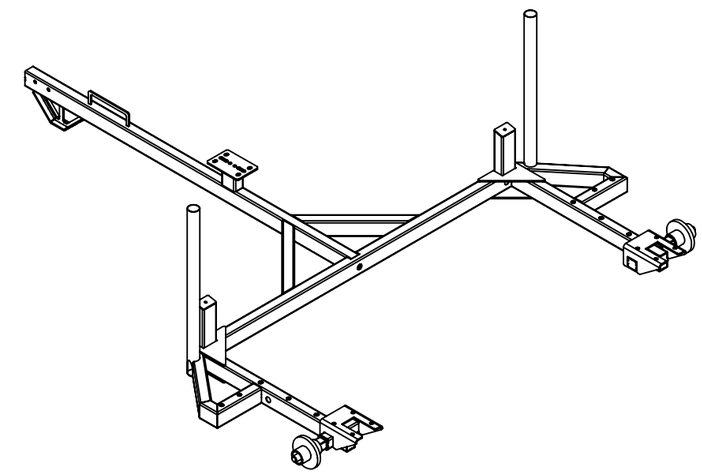

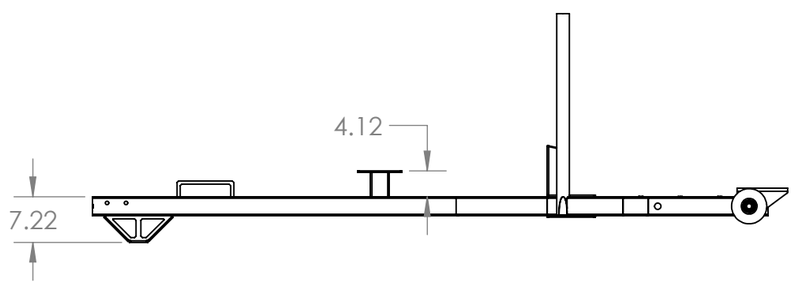

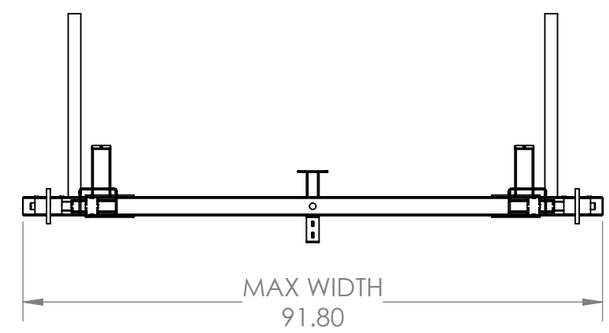

TEXAS METAL WORKS
101 INDUSTRIAL CT, CONROE, TX 77301
PH: 281-238-9652

UNLESS OTHERWISE SPECIFIED
DIMENSIONS ARE IN INCHES
TOLERANCES:
FRACTIONAL ±1/16
ANGULAR: BEND ±1° MACH ±0.5°
DIMENSIONAL TOLERANCE ± 0.015
DO NOT SCALE DRAWING

	NAME	DATE
DRAWN	Noe F	10/15/25
CHECKED		
MFG. APPR.		
Q.A. APPR.		

COMMENTS :

PART # HAYB-001-000
P/N REV : A-1
DWG. VER : 1
SO# :

DESCRIPTION : Hay Bale Trailer - Frame Weldment
MATERIAL :
ROUTING :
CUSTOMER : STD. PRODUCT

PROPRIETARY AND CONFIDENTIAL : THE INFORMATION CONTAINED IN THIS DRAWING IS THE SOLE PROPERTY OF TEXAS METAL WORKS. ANY REPRODUCTION, IN PART OR AS A WHOLE, WITHOUT WRITTEN PERMISSION OF TEXAS METAL WORKS IS PROHIBITED.

ITEM	PART NUMBER	DESCRIPTION	REV	QTY.
1	1001-010-000	Projection Weld Nut - .25-20	A-1	2
2	1001-015-001	Steel Rivet Nut - 3/8"-16	A-1	10
3	HAYB-050-000	Hay Bale Trailer - Tongue	A-1	1
4	HAYB-050-001	Hay Bale Trailer - Tongue Reinforcement	A-1	2
5	HAYB-050-002	Hay Bale Trailer - Left Side	A-1	1
6	HAYB-050-003	Hay Bale Trailer - Mid Cross Member	A-1	1
7	HAYB-050-004	Hay Bale Trailer - Upright Left	A-1	1
8	HAYB-050-005	Hay Bale Trailer - Upright Cap	A-1	2
9	HAYB-050-006	Hay Bale Trailer - Upright Right	A-1	1
10	HAYB-050-007	Hay Bale Trailer - Right Side	A-1	1
11	HAYB-051-000	Hay Bale Trailer - Tube Cap 3x2	A-1	3
12	HAYB-051-001	Hay Bale Trailer - Tube Cap 2x2	A-1	2
13	HAYB-052-000	Hay Bale Trailer - Winch Mount Tube	A-1	1
14	HAYB-052-001	Hay Bale Trailer - Winch Mount Plate	A-1	1
15	HAYB-053-000	Hay Bale Trailer - Spindle Sleeve	A-1	2
16	HAYB-054-000	Hay Bale Trailer - Spindle Adapter Plate	A-1	2
17	HAYB-055-000	Hay Bale Trailer - Tongue Handle	A-1	1
18	HAYB-056-000	Hay Bale Trailer - Pitchfork Holder Bottom Cap	A-1	2
19	HAYB-057-000	Hay Bale Trailer - Pitchfork Holder Tube	A-1	2
20	HAYB-058-000	Hay Bale Trailer - Cow Spreader Tube	A-1	2
21	HAYB-059-000	Hay Bale Trailer - Bearing Mount	A-1	2
22	HAYB-060-000	Hay Bale Trailer - Tongue Leg - Mid Plate	A-1	1
23	HAYB-060-001	Hay Bale Trailer - Tongue Leg - Side Plate	A-1	2
24	HAYB-060-002	Hay Bale Trailer - Tongue Leg - Bot Plate	A-1	1
25	HAYB-064-000	Hay Bale Trailer - Gusset 8in	A-1	2
26	HAYB-064-001	Hay Bale Trailer - Gusset 8in - Cutout	A-1	2
27	Spindle Assembly	Spindle and Hub Assembly	A-1	2

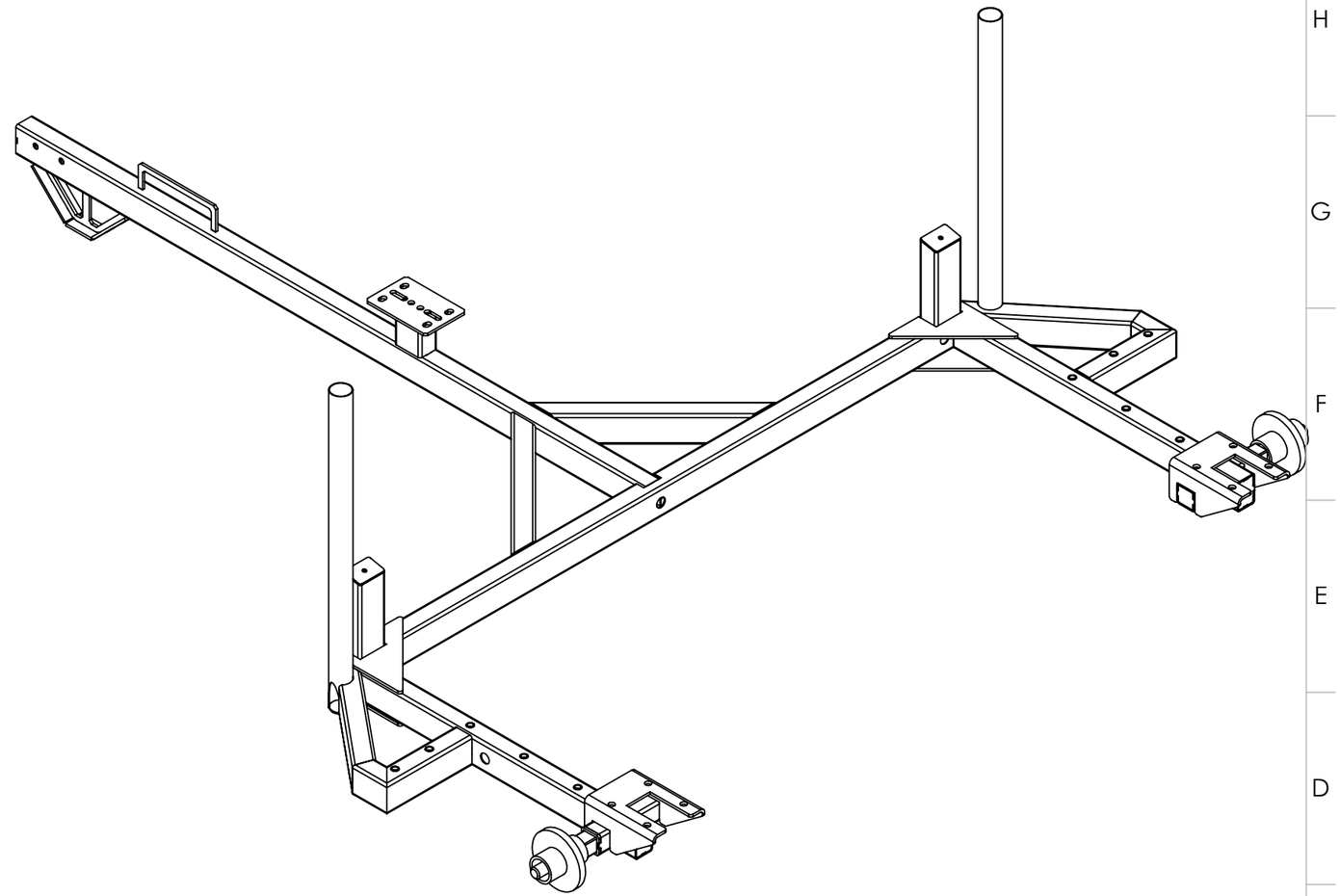

TEXAS METAL WORKS
101 INDUSTRIAL CT, CONROE, TX 77301
PH: 281-238-9652

UNLESS OTHERWISE SPECIFIED
DIMENSIONS ARE IN INCHES
TOLERANCES:
FRACTIONAL ±1/16
ANGULAR: BEND ±1° MACH ±0.5°
DIMENSIONAL TOLERANCE ± 0.015
DO NOT SCALE DRAWING

	NAME	DATE
DRAWN	Noe F	10/15/25
CHECKED		
MFG. APPR.		
Q.A. APPR.		

COMMENTS :

PART # HAYB-001-000
P/N REV : A-1
DWG. VER : 1
SO# :

DESCRIPTION : Hay Bale Trailer - Frame Weldment
MATERIAL :
ROUTING :
CUSTOMER : STD. PRODUCT

PROPRIETARY AND CONFIDENTIAL : THE INFORMATION CONTAINED IN THIS DRAWING IS THE SOLE PROPERTY OF TEXAS METAL WORKS. ANY REPRODUCTION, IN PART OR AS A WHOLE, WITHOUT WRITTEN PERMISSION OF TEXAS METAL WORKS IS PROHIBITED.

ITEM	PART NUMBER	DESCRIPTION	REV	QTY.
5	HAYB-050-002	Hay Bale Trailer - Left Side	A-1	1
6	HAYB-050-003	Hay Bale Trailer - Mid Cross Member	A-1	1
7	HAYB-050-004	Hay Bale Trailer - Upright Left	A-1	1
9	HAYB-050-006	Hay Bale Trailer - Upright Right	A-1	1
10	HAYB-050-007	Hay Bale Trailer - Right Side	A-1	1
11	HAYB-051-000	Hay Bale Trailer - Tube Cap 3x2	A-1	3
25	HAYB-064-000	Hay Bale Trailer - Gusset 8in	A-1	2
26	HAYB-064-001	Hay Bale Trailer - Gusset 8in - Cutout	A-1	2

STEP 1

Use (26) 2X and (25) 2X as a template to ensure 90° corners when welding (10), (6) and (5) together. Using the slots in (6) and the cutout in (26) 2X weld (7) and (9) in place

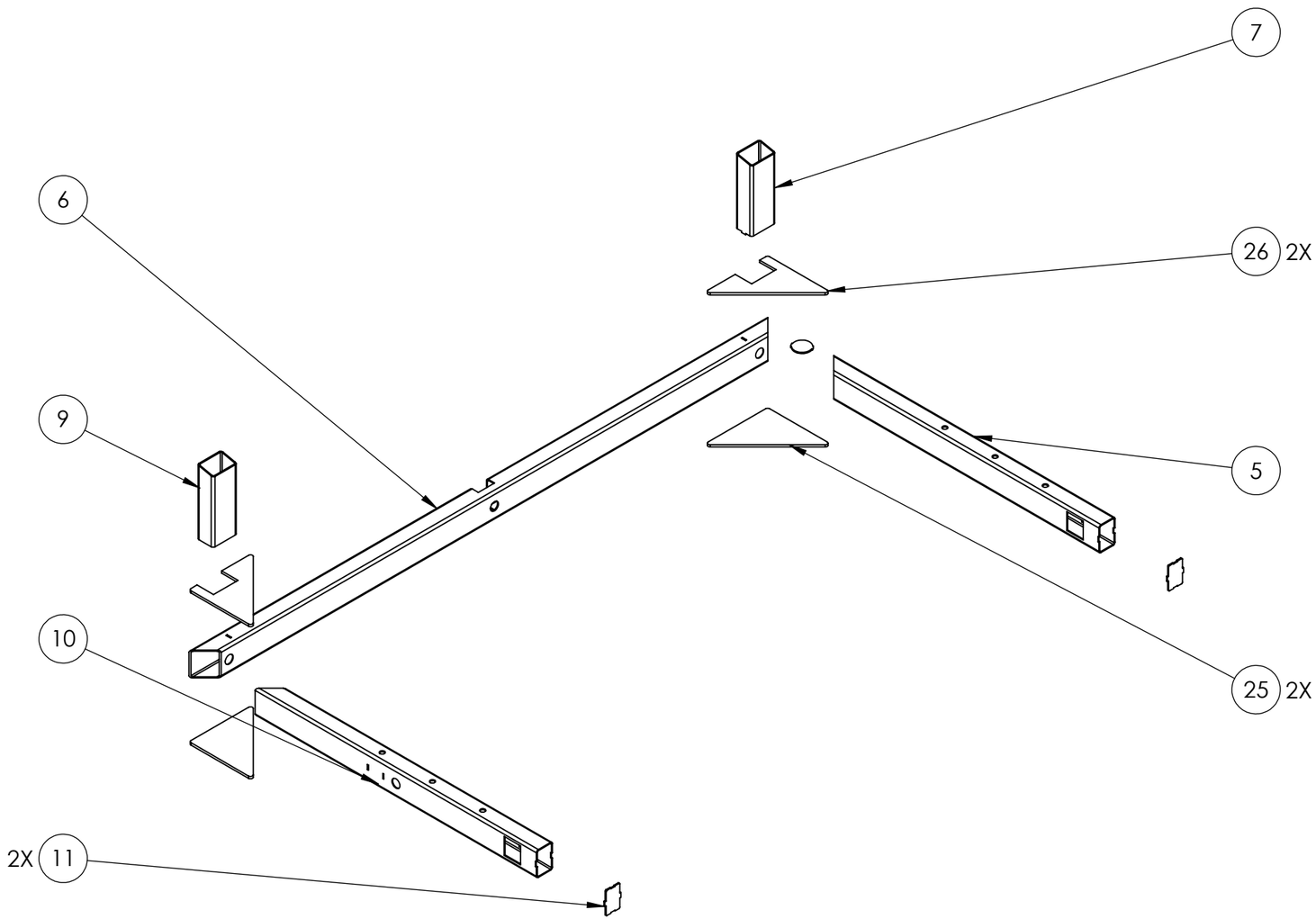

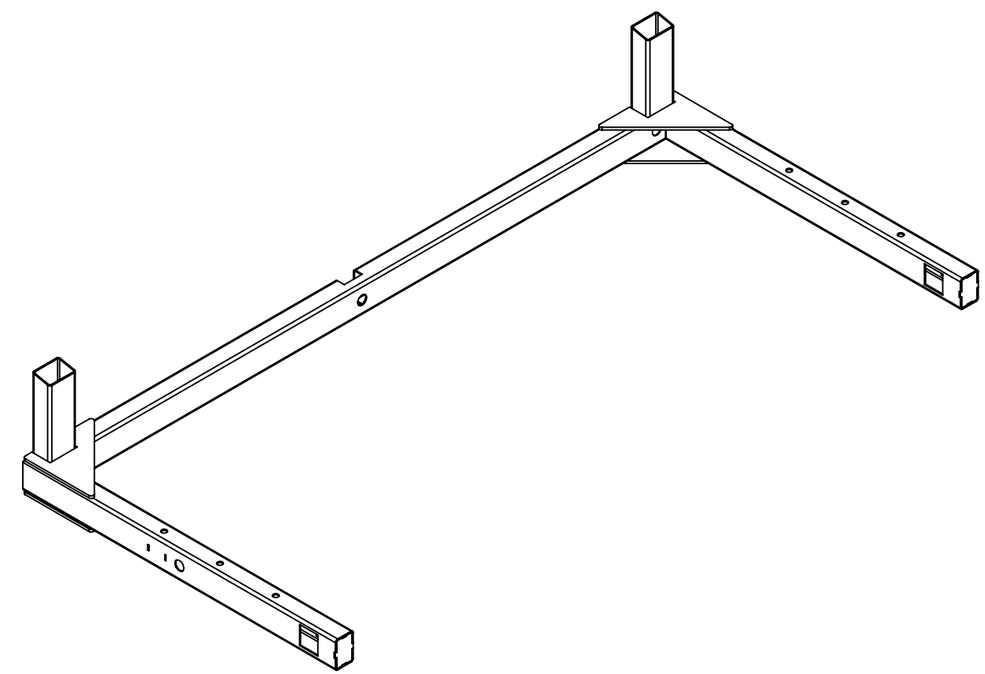

TEXAS METAL WORKS
101 INDUSTRIAL CT, CONROE, TX 77301
PH: 281-238-9652

UNLESS OTHERWISE SPECIFIED
DIMENSIONS ARE IN INCHES
TOLERANCES:
FRACTIONAL ±1/16
ANGULAR: BEND ±1° MACH ±0.5°
DIMENSIONAL TOLERANCE ± 0.015
DO NOT SCALE DRAWING

	NAME	DATE
DRAWN	Noe F	10/15/25
CHECKED		
MFG. APPR.		
Q.A. APPR.		

COMMENTS :

PART # HAYB-001-000
P/N REV : A-1
DWG. VER : 1
SO# :

DESCRIPTION : Hay Bale Trailer - Frame Weldment
MATERIAL :
ROUTING :
CUSTOMER : STD. PRODUCT

PROPRIETARY AND CONFIDENTIAL : THE INFORMATION CONTAINED IN THIS DRAWING IS THE SOLE PROPERTY OF TEXAS METAL WORKS. ANY REPRODUCTION, IN PART OR AS A WHOLE, WITHOUT WRITTEN PERMISSION OF TEXAS METAL WORKS IS PROHIBITED.

ITEM	PART NUMBER	DESCRIPTION	REV	QTY.
1	1001-010-000	Projection Weld Nut - .25-20	A-1	2
7	HAYB-050-004	Hay Bale Trailer - Upright Left	A-1	1
8	HAYB-050-005	Hay Bale Trailer - Upright Cap	A-1	2
9	HAYB-050-006	Hay Bale Trailer - Upright Right	A-1	1

STEP 2

Weld 2X (1) to 2X (8) using the alignment hole, then weld 2X (8) to (9) and (7),

DO NOT GET WELDMENT INTO THE THREADS

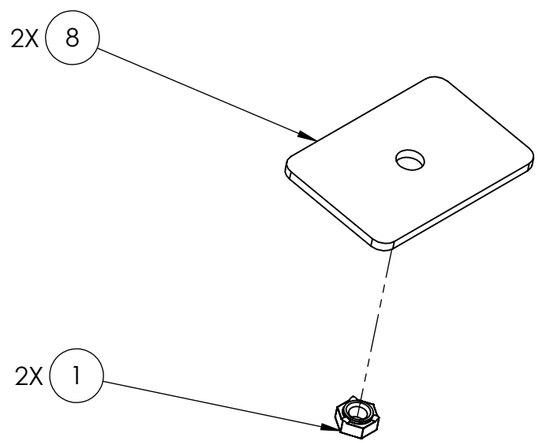

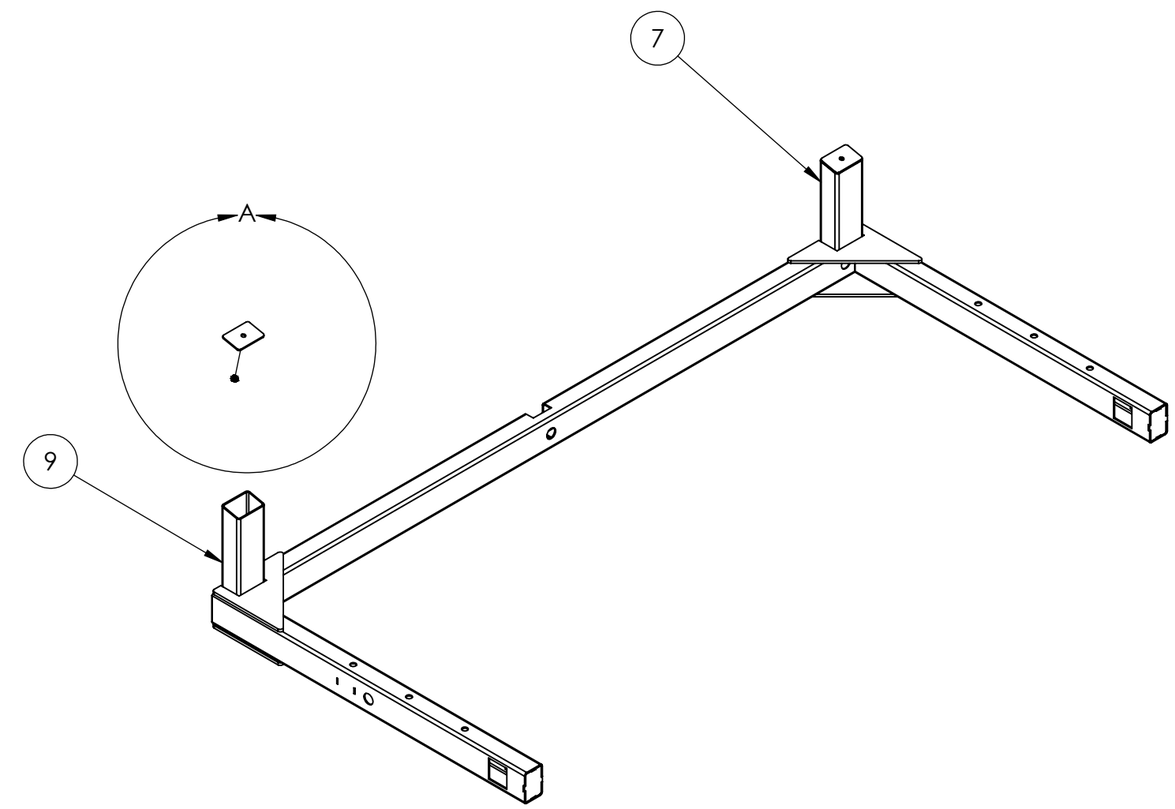

TEXAS METAL WORKS
101 INDUSTRIAL CT, CONROE, TX 77301
PH: 281-238-9652

UNLESS OTHERWISE SPECIFIED
DIMENSIONS ARE IN INCHES
TOLERANCES:
FRACTIONAL ±1/16
ANGULAR: BEND ±1° MACH ±0.5°
DIMENSIONAL TOLERANCE ± 0.015
DO NOT SCALE DRAWING

	NAME	DATE
DRAWN	Noe F	10/15/25
CHECKED		
MFG. APPR.		
Q.A. APPR.		

COMMENTS :

PART # HAYB-001-000
P/N REV : A-1
DWG. VER : 1
SO# :

DESCRIPTION : Hay Bale Trailer - Frame Weldment
MATERIAL :
ROUTING :
CUSTOMER : STD. PRODUCT

PROPRIETARY AND CONFIDENTIAL : THE INFORMATION CONTAINED IN THIS DRAWING IS THE SOLE PROPERTY OF TEXAS METAL WORKS. ANY REPRODUCTION, IN PART OR AS A WHOLE, WITHOUT WRITTEN PERMISSION OF TEXAS METAL WORKS IS PROHIBITED.

ITEM	PART NUMBER	DESCRIPTION	REV	QTY.
10	HAYB-050-007	Hay Bale Trailer - Right Side	A-1	1
12	HAYB-051-001	Hay Bale Trailer - Tube Cap 2x2	A-1	2
15	HAYB-053-000	Hay Bale Trailer - Spindle Sleeve	A-1	2
16	HAYB-054-000	Hay Bale Trailer - Spindle Adapter Plate	A-1	2
21	HAYB-059-000	Hay Bale Trailer - Bearing Mount	A-1	2
24	HAYB-060-002	Hay Bale Trailer - Tongue Leg - Bot Plate	A-1	1
27	Spindle Assembly	Spindle and Hub Assembly	A-1	2

STEP 3

Weld (16) 2X and (12) 2X to (15) 2X, insert (27) 2X inside of (15) 2X ensuring to leave around 3.94 inches of clearance between the hub face and (16) 2X, shim (27) 2X as needed for straightness.

Weld (21) 2X on top of (15) 2X ensuring that the inside flange is flush with the back side of (15) 2X.

Weld (15) 2X into (10) and make sure to leave 3.00 between the back and (10)

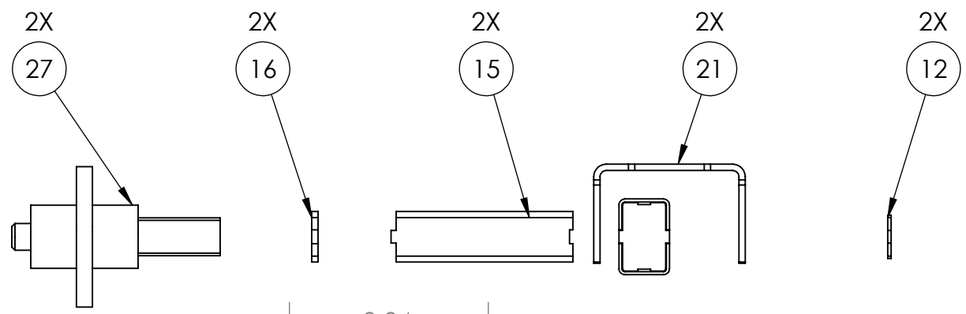

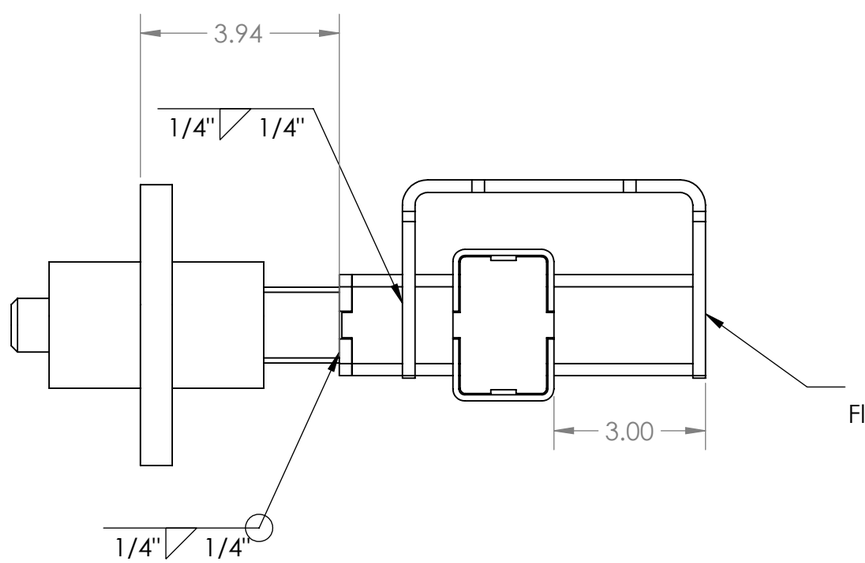

Flush side (24) 2X to end of (15) 2X

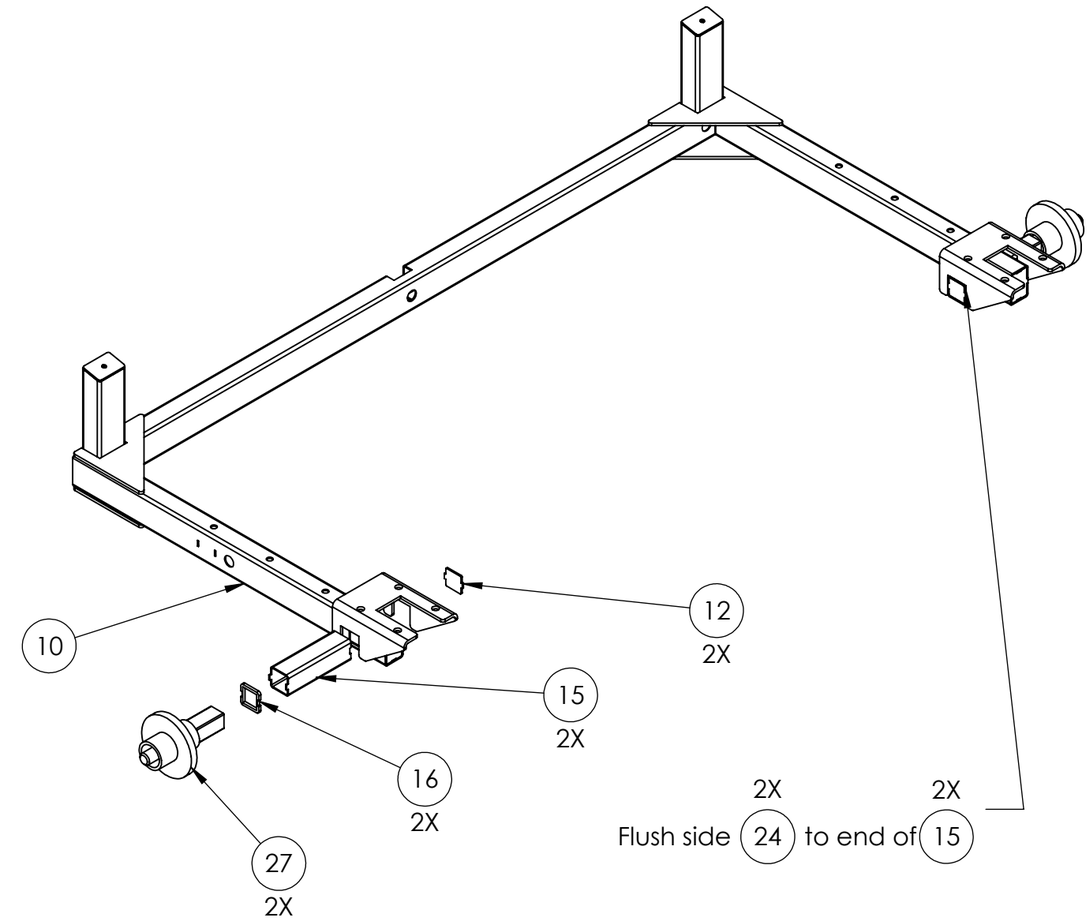

Flush side (24) 2X to end of (15) 2X

REMEMBER TO MIRROR ALL OPERATIONS FOR OTHER SIDE

TEXAS METAL WORKS
101 INDUSTRIAL CT, CONROE, TX 77301
PH: 281-238-9652

UNLESS OTHERWISE SPECIFIED
DIMENSIONS ARE IN INCHES
TOLERANCES:
FRACTIONAL ±1/16
ANGULAR: BEND ±1° MACH ±0.5°
DIMENSIONAL TOLERANCE ± 0.015
DO NOT SCALE DRAWING

	NAME	DATE
DRAWN	Noe F	10/15/25
CHECKED		
MFG. APPR.		
Q.A. APPR.		

COMMENTS :

PART # HAYB-001-000
P/N REV : A-1
DWG. VER : 1
SO# :

DESCRIPTION : Hay Bale Trailer - Frame Weldment
MATERIAL :
ROUTING :
CUSTOMER : STD. PRODUCT

PROPRIETARY AND CONFIDENTIAL : THE INFORMATION CONTAINED IN THIS DRAWING IS THE SOLE PROPERTY OF TEXAS METAL WORKS. ANY REPRODUCTION, IN PART OR AS A WHOLE, WITHOUT WRITTEN PERMISSION OF TEXAS METAL WORKS IS PROHIBITED.

ITEM	PART NUMBER	DESCRIPTION	REV	QTY.
10	HAYB-050-007	Hay Bale Trailer - Right Side	A-1	1
18	HAYB-056-000	Hay Bale Trailer - Pitchfork Holder Bottom Cap	A-1	2
19	HAYB-057-000	Hay Bale Trailer - Pitchfork Holder Tube	A-1	2
20	HAYB-058-000	Hay Bale Trailer - Cow Spreader Tube	A-1	2

STEP 4

Align and weld (18) (2X) to (19) (2X), then (19) (2X) to (20) (2X) using the cutout found in (20) (2X). Using the tabs in (20) (2X) align and weld to (10)

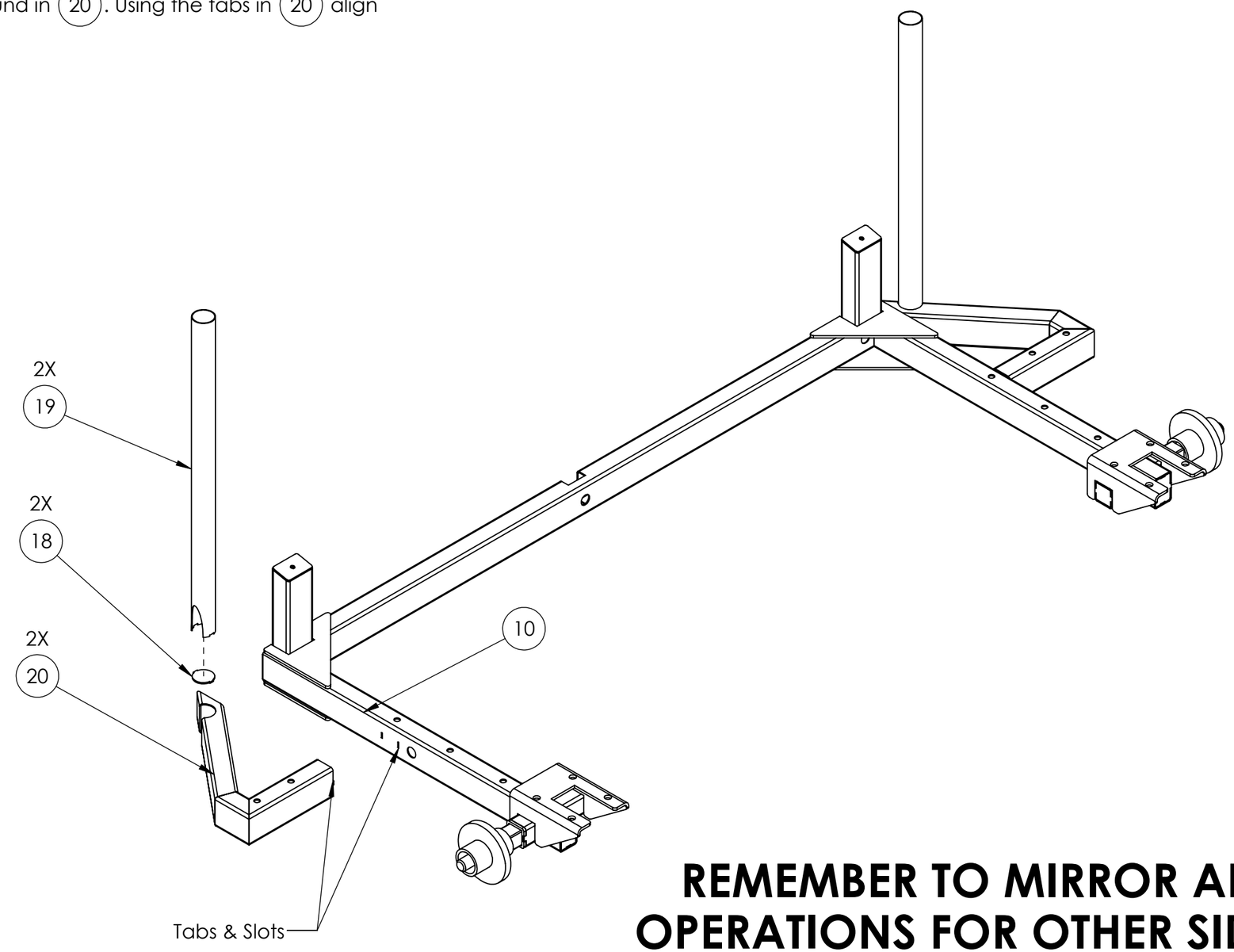

REMEMBER TO MIRROR ALL OPERATIONS FOR OTHER SIDE

TEXAS METAL WORKS
101 INDUSTRIAL CT, CONROE, TX 77301
PH: 281-238-9652

UNLESS OTHERWISE SPECIFIED
DIMENSIONS ARE IN INCHES
TOLERANCES:
FRACTIONAL ±1/16
ANGULAR: BEND ±1° MACH ±0.5°
DIMENSIONAL TOLERANCE ± 0.015
DO NOT SCALE DRAWING

	NAME	DATE
DRAWN	Noe F	10/15/25
CHECKED		
MFG. APPR.		
Q.A. APPR.		

COMMENTS :

PART # HAYB-001-000
P/N REV : A-1
DWG. VER : 1
SO# :

DESCRIPTION : Hay Bale Trailer - Frame Weldment
MATERIAL :
ROUTING :
CUSTOMER : STD. PRODUCT

PROPRIETARY AND CONFIDENTIAL : THE INFORMATION CONTAINED IN THIS DRAWING IS THE SOLE PROPERTY OF TEXAS METAL WORKS. ANY REPRODUCTION, IN PART OR AS A WHOLE, WITHOUT WRITTEN PERMISSION OF TEXAS METAL WORKS IS PROHIBITED.

ITEM	PART NUMBER	DESCRIPTION	REV	QTY.
3	HAYB-050-000	Hay Bale Trailer - Tongue	A-1	1
4	HAYB-050-001	Hay Bale Trailer - Tongue Reinforcement	A-1	2
6	HAYB-050-003	Hay Bale Trailer - Mid Cross Member	A-1	1

STEP 5

Now it's time to join the tongue to the rear frame, align (4) 2X using the cutout found in (6), after that it's time to align and weld (4) 2X

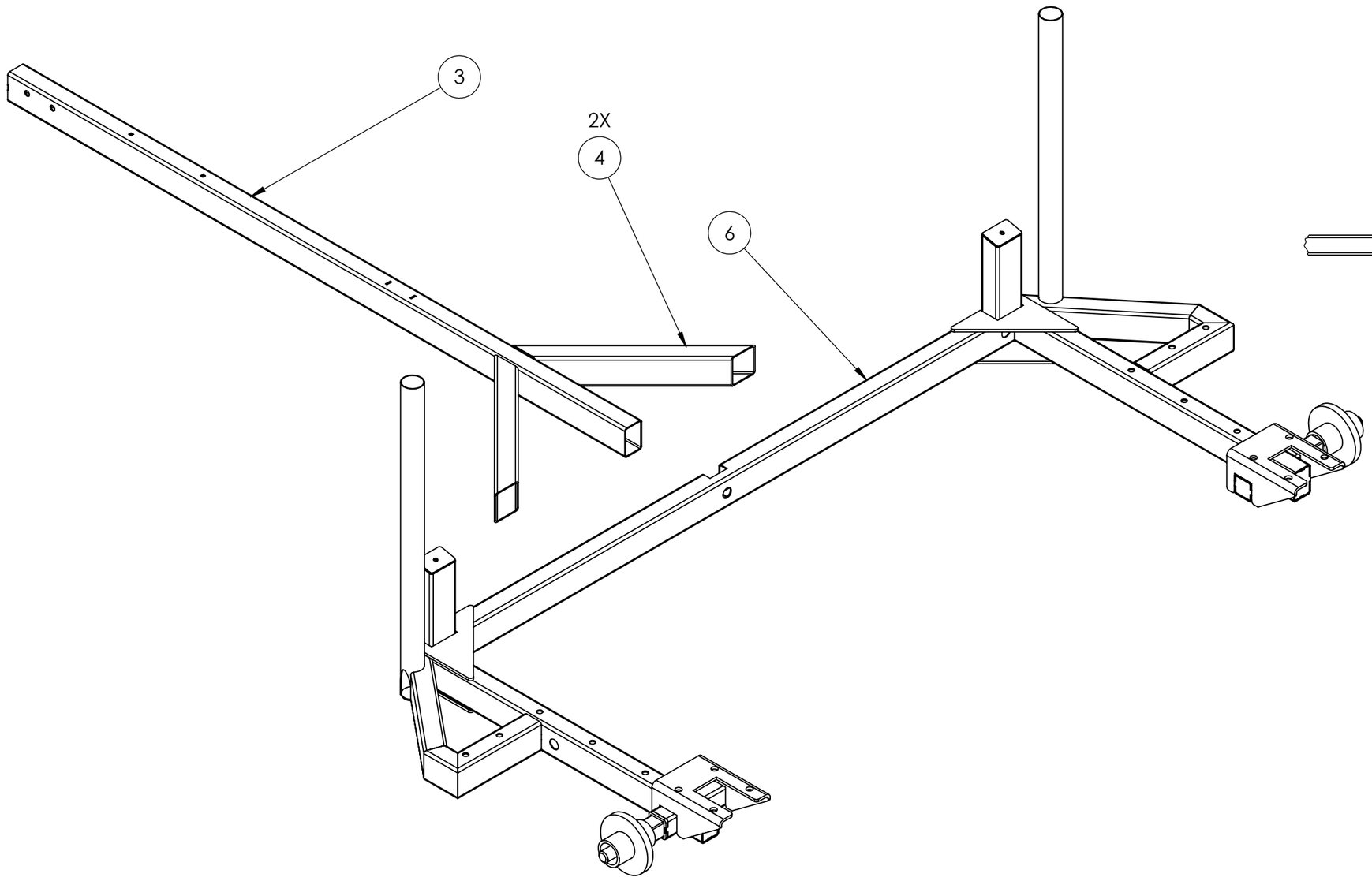

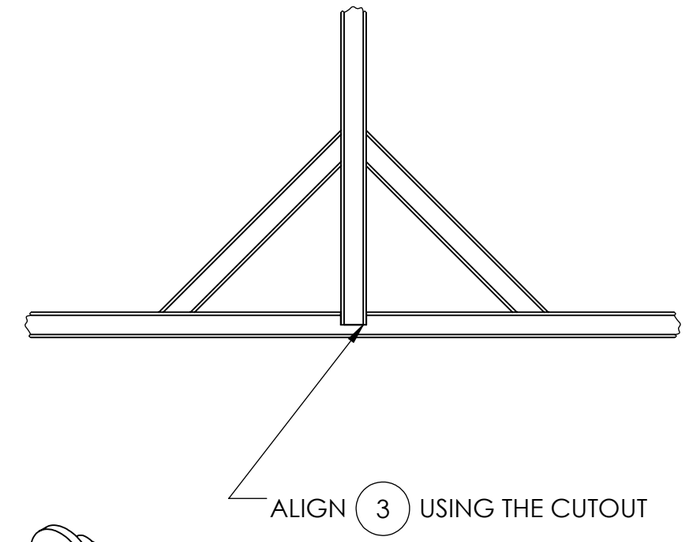

TEXAS METAL WORKS
101 INDUSTRIAL CT, CONROE, TX 77301
PH: 281-238-9652

UNLESS OTHERWISE SPECIFIED
DIMENSIONS ARE IN INCHES
TOLERANCES:
FRACTIONAL ±1/16
ANGULAR: BEND ±1° MACH ±0.5°
DIMENSIONAL TOLERANCE ± 0.015
DO NOT SCALE DRAWING

	NAME	DATE
DRAWN	Noe F	10/15/25
CHECKED		
MFG. APPR.		
Q.A. APPR.		

COMMENTS :

PART # HAYB-001-000
P/N REV : A-1
DWG. VER : 1
SO# :

DESCRIPTION : Hay Bale Trailer - Frame Weldment
MATERIAL :
ROUTING :
CUSTOMER : STD. PRODUCT

PROPRIETARY AND CONFIDENTIAL : THE INFORMATION CONTAINED IN THIS DRAWING IS THE SOLE PROPERTY OF TEXAS METAL WORKS. ANY REPRODUCTION, IN PART OR AS A WHOLE, WITHOUT WRITTEN PERMISSION OF TEXAS METAL WORKS IS PROHIBITED.

ITEM	PART NUMBER	DESCRIPTION	REV	QTY.
3	HAYB-050-000	Hay Bale Trailer - Tongue	A-1	1
13	HAYB-052-000	Hay Bale Trailer - Winch Mount Tube	A-1	1
14	HAYB-052-001	Hay Bale Trailer - Winch Mount Plate	A-1	1
17	HAYB-055-000	Hay Bale Trailer - Tongue Handle	A-1	1
22	HAYB-060-000	Hay Bale Trailer - Tongue Leg - Mid Plate	A-1	1
23	HAYB-060-001	Hay Bale Trailer - Tongue Leg - Side Plate	A-1	2
24	HAYB-060-002	Hay Bale Trailer - Tongue Leg - Bot Plate	A-1	1

STEP 6

Now we need to add the last accessories to the tongue, using the tabs and slots we need to align and weld (17) (14) (13) to (3)

For the Leg using the tabs and slots, align and weld 2X (23) (24) to (22) and then to (3)

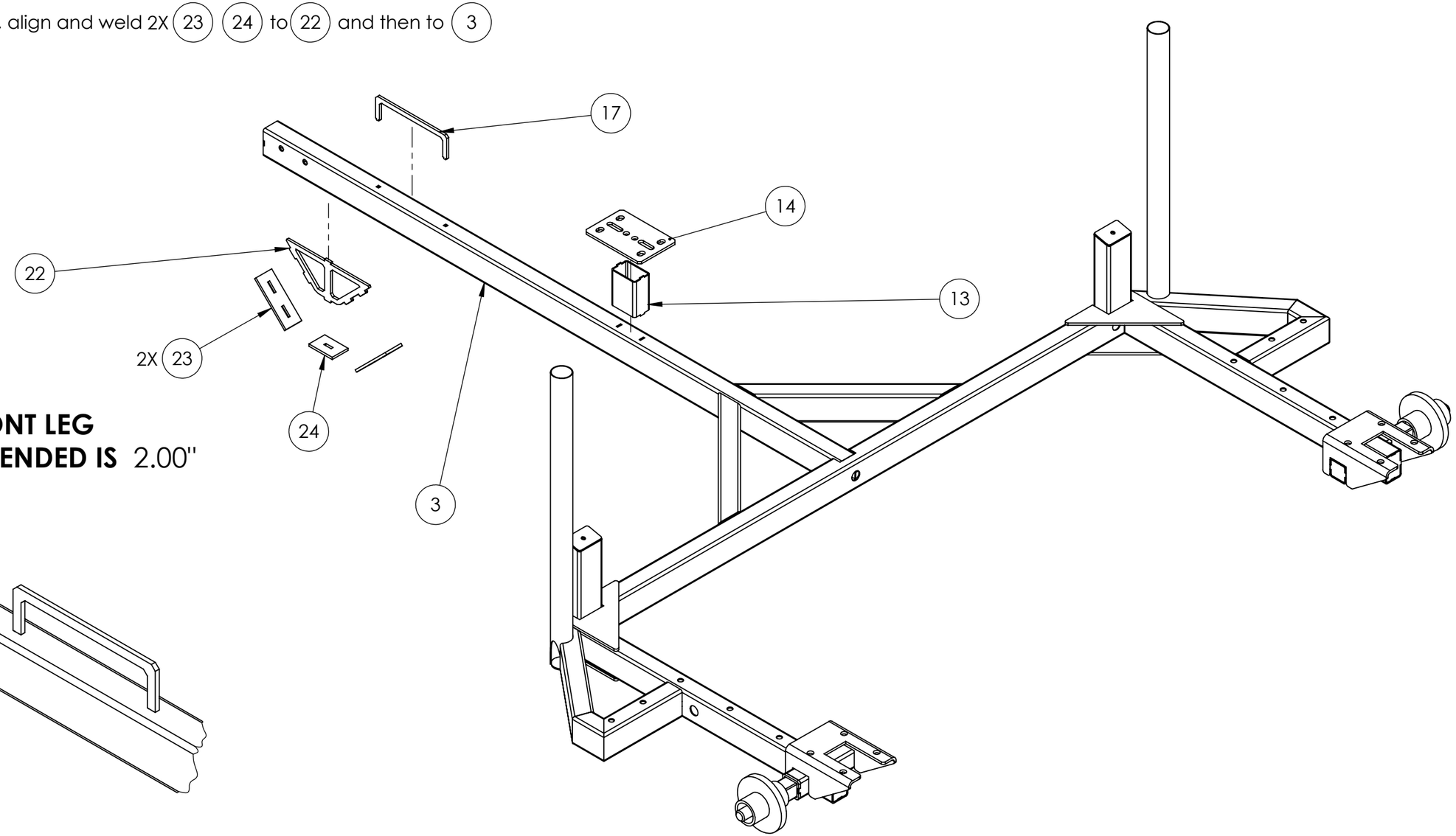

POSITIONING OF THE FRONT LEG ISN'T CRITICAL, RECOMMENDED IS 2.00"

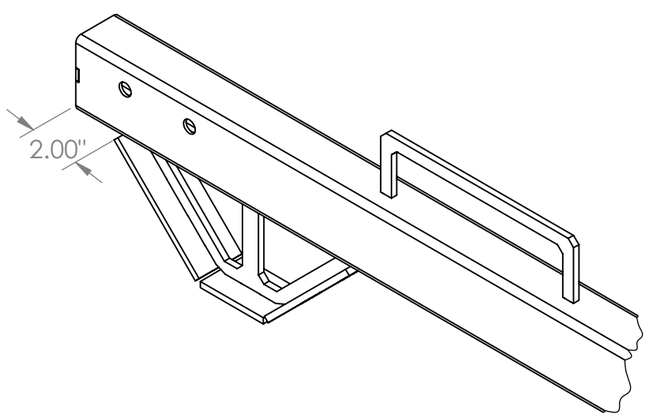

TEXAS METAL WORKS
101 INDUSTRIAL CT, CONROE, TX 77301
PH: 281-238-9652

UNLESS OTHERWISE SPECIFIED
DIMENSIONS ARE IN INCHES
TOLERANCES:
FRACTIONAL ±1/16
ANGULAR: BEND ±1° MACH ±0.5°
DIMENSIONAL TOLERANCE ± 0.015
DO NOT SCALE DRAWING

	NAME	DATE
DRAWN	Noe F	10/15/25
CHECKED		
MFG. APPR.		
Q.A. APPR.		

COMMENTS :

PART # HAYB-001-000
P/N REV : A-1
DWG. VER : 1
SO# :

DESCRIPTION : Hay Bale Trailer - Frame Weldment
MATERIAL :
ROUTING :
CUSTOMER : STD. PRODUCT

PROPRIETARY AND CONFIDENTIAL : THE INFORMATION CONTAINED IN THIS DRAWING IS THE SOLE PROPERTY OF TEXAS METAL WORKS. ANY REPRODUCTION, IN PART OR AS A WHOLE, WITHOUT WRITTEN PERMISSION OF TEXAS METAL WORKS IS PROHIBITED.

ITEM	PART NUMBER	DESCRIPTION	REV	QTY.
2	1001-015-001	Steel Rivet Nut - 3/8"-16	A-1	10

STEP 7

Now we insert (2) 10X into all the designated holes

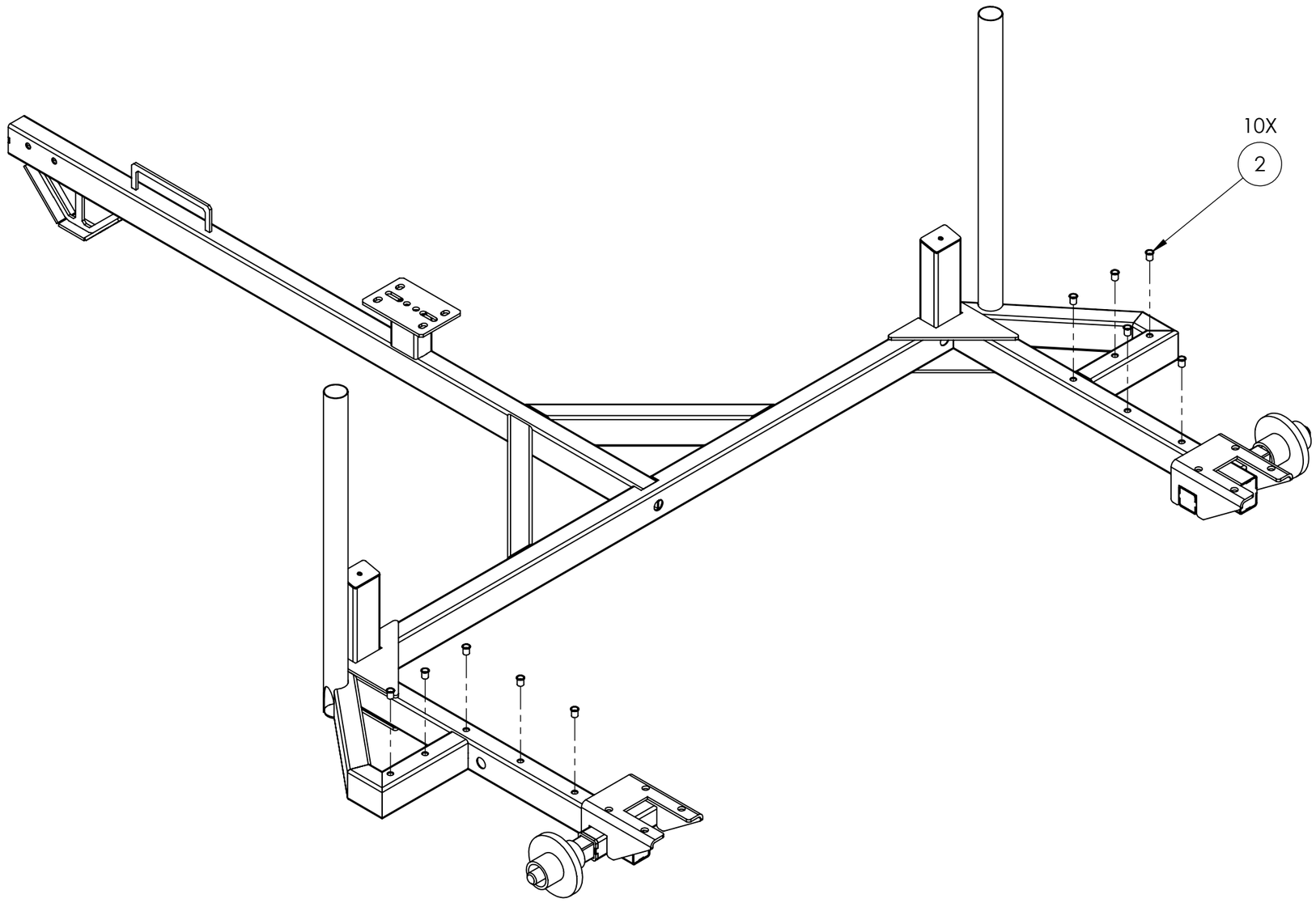

TEXAS METAL WORKS
101 INDUSTRIAL CT, CONROE, TX 77301
PH: 281-238-9652

UNLESS OTHERWISE SPECIFIED
DIMENSIONS ARE IN INCHES
TOLERANCES:
FRACTIONAL ±1/16
ANGULAR: BEND ±1° MACH ±0.5°
DIMENSIONAL TOLERANCE ± 0.015
DO NOT SCALE DRAWING

	NAME	DATE
DRAWN	Noe F	10/15/25
CHECKED		
MFG. APPR.		
Q.A. APPR.		

COMMENTS :

PART # HAYB-001-000
P/N REV : A-1
DWG. VER : 1
SO# :

DESCRIPTION : Hay Bale Trailer - Frame Weldment
MATERIAL :
ROUTING :
CUSTOMER : STD. PRODUCT

PROPRIETARY AND CONFIDENTIAL : THE INFORMATION CONTAINED IN THIS DRAWING IS THE SOLE PROPERTY OF TEXAS METAL WORKS. ANY REPRODUCTION, IN PART OR AS A WHOLE, WITHOUT WRITTEN PERMISSION OF TEXAS METAL WORKS IS PROHIBITED.

REVISIONS			
REV.	DESCRIPTION	DATE	APPROVED

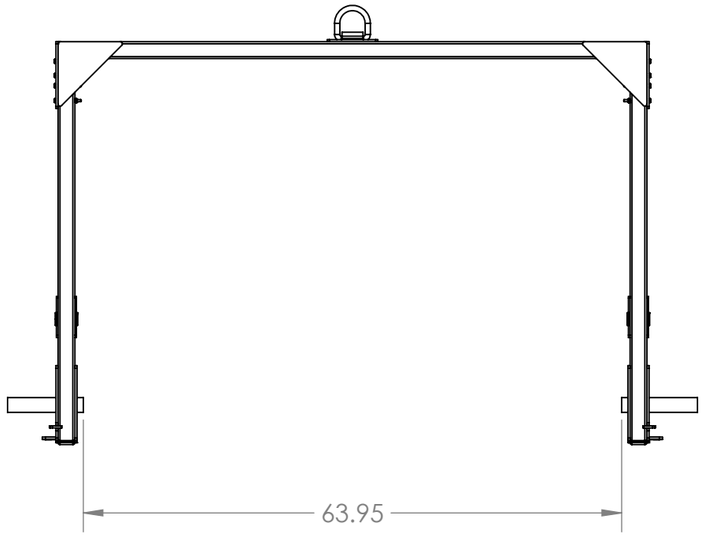

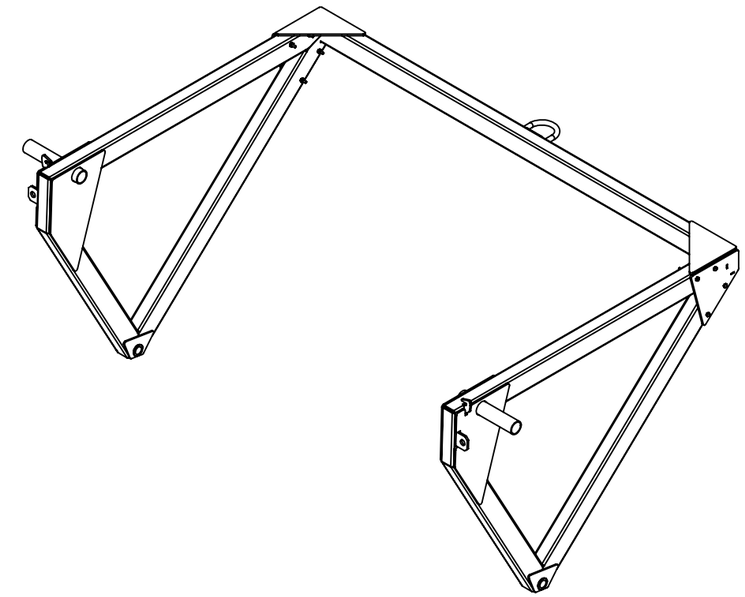

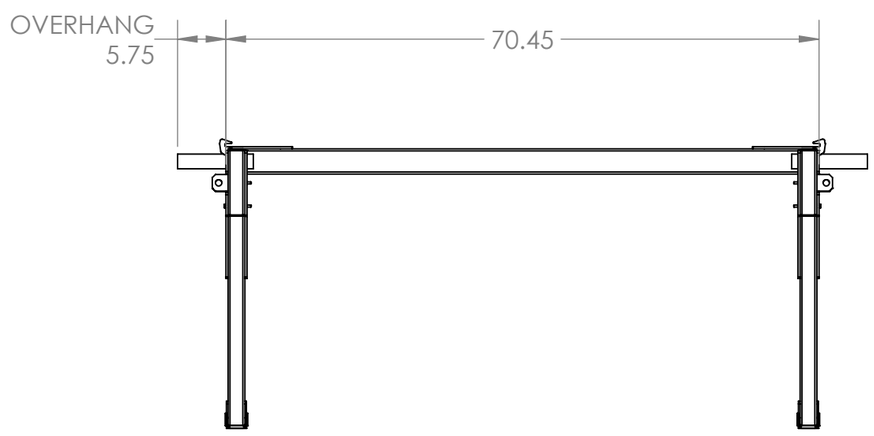

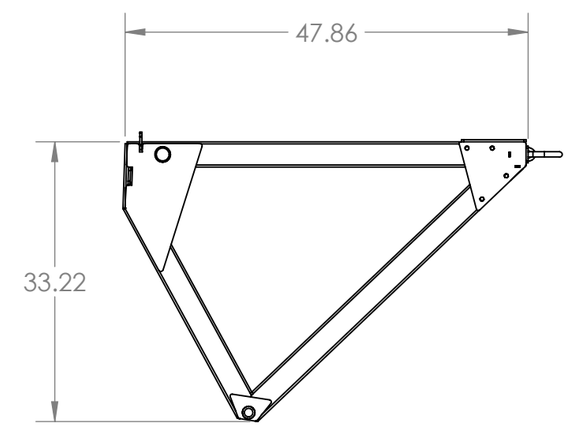

WELD PROJECTS
101 INDUSTRIAL CT, CONROE, TX 77301
PH: 281-238-9652

UNLESS OTHERWISE SPECIFIED
DIMENSIONS ARE IN INCHES
TOLERANCES:
FRACTIONAL ±1/16
ANGULAR: BEND ±1° MACH ±0.5°
DIMENSIONAL TOLERANCE ± 0.015
DO NOT SCALE DRAWING

	NAME	DATE
DRAWN	Noe F	10/15/25
CHECKED		
MFG. APPR.		
Q.A. APPR.		

COMMENTS :

PART # HAYB-002-000
P/N REV : A-1
DWG. VER : 1
SO# :

DESCRIPTION : Hay Bale Trailer -Scissor Weldment
MATERIAL : "
ROUTING :
CUSTOMER : STD. PRODUCT

PROPRIETARY AND CONFIDENTIAL : THE INFORMATION CONTAINED IN THIS DRAWING IS THE SOLE PROPERTY OF WELD PROJECTS. ANY REPRODUCTION, IN PART OR AS A WHOLE, WITHOUT WRITTEN PERMISSION OF WELD PROJECTS IS PROHIBITED.

ITEM	PART NUMBER	DESCRIPTION	Material Gauge	MATERIAL	REV	QTY.
1	.25" nut	0.25"-20 - Steel Hex Nut		Steel	A-1	8
2	.25"- 3" Bolt	Hex Screw 0.25" - 3		Steel	A-1	8
3	2938T25	High-Load Oil-Embedded Sleeve Bearing		863 Iron-Copper		4
4	HAYB-061-000	Hay Bale Trailer - D-Ring CrossBar	2x3_0.12"	ASTM A36 Steel	A-1	1
5	HAYB-062-000	Hay Bale Trailer - CrossBar Gusset	0.25"	ASTM A36 Steel	A-1	2
6	HAYB-063-000	Hay Bale Trailer - Scissor - Front	2x3_0.12	ASTM A36 Steel	A-1	2
7	HAYB-063-001	Hay Bale Trailer - Scissor - Tube Cap	0.135	ASTM A36 Steel	A-1	2
8	HAYB-063-002	Hay Bale Trailer - Scissor - Drag	2x3_0.12	ASTM A36 Steel	A-1	2
9	HAYB-064-000	Hay Bale Trailer - Gusset 8in	0.25"	ASTM A36 Steel	A-1	2
10	HAYB-065-000	Hay Bale Trailer - Chain Holder	0.25"	ASTM A36 Steel	A-1	2
11	HAYB-066-000	Hay Bale Trailer - Skewer Sleeve	DOM 1.75X0.12"	ASTM A36 Steel	A-1	2
12	HAYB-067-000	Hay Bale Trailer - Scissor Reinforcement	0.25"	ASTM A36 Steel	A-1	4
13	HAYB-068-000	Hay Bale Trailer - Chain Retainer Hook	0.25"	ASTM A36 Steel	A-1	2
14	HAYB-069-000	Hay Bale Trailer - D Ring Reinforcement Plate	0.25"	ASTM A36 Steel	A-1	1
15	HAYB-070-000	Hay Bale Trailer - Scissor Upper Reinforcement Inside	0.25"	ASTM A36 Steel	A-1	2
16	HAYB-070-001	Hay Bale Trailer - Scissor Upper Reinforcement Outside	0.25"	ASTM A36 Steel	A-1	2
17	Tie Down Ring	Weld-on Tie-Down Ring		ASTM A36 Steel		1

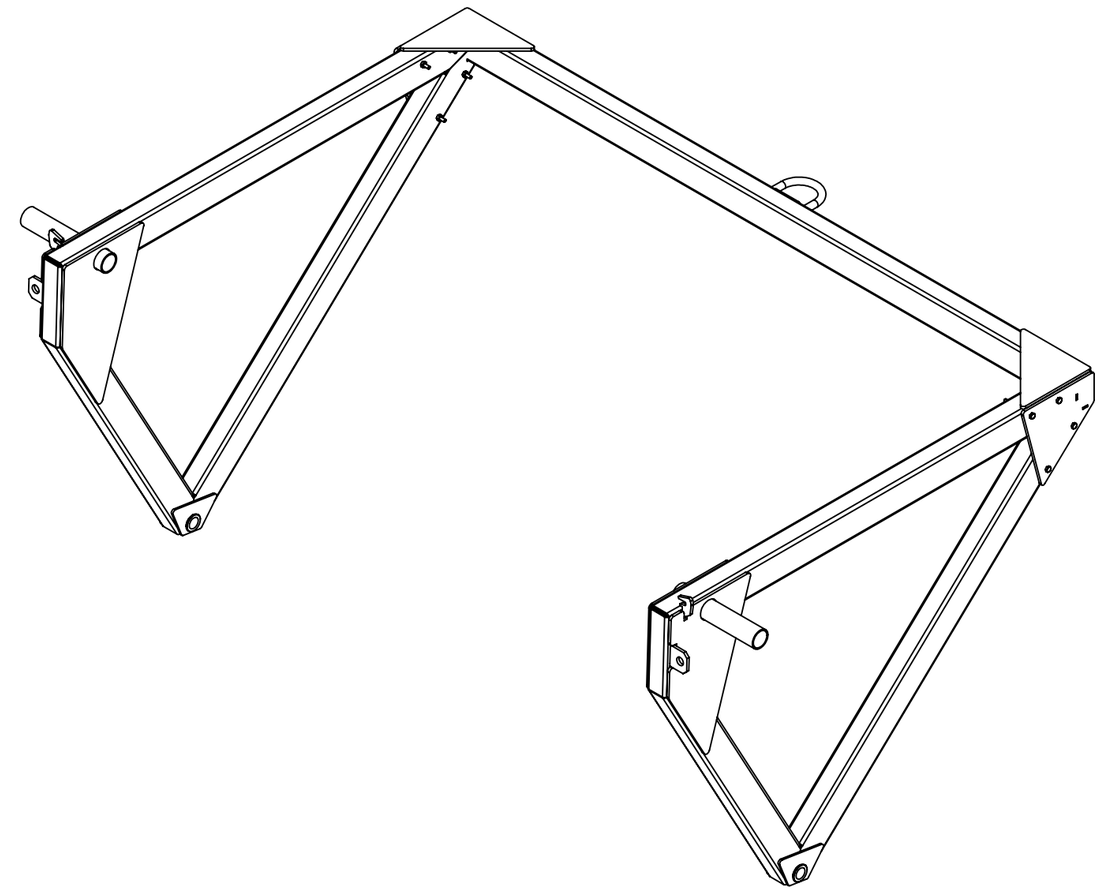

WELD PROJECTS
101 INDUSTRIAL CT, CONROE, TX 77301
PH: 281-238-9652

UNLESS OTHERWISE SPECIFIED
DIMENSIONS ARE IN INCHES
TOLERANCES:
FRACTIONAL ±1/16
ANGULAR: BEND ±1° MACH ±0.5°
DIMENSIONAL TOLERANCE ± 0.015
DO NOT SCALE DRAWING

	NAME	DATE
DRAWN	Noe F	10/15/25
CHECKED		
MFG. APPR.		
Q.A. APPR.		

COMMENTS :

PART # HAYB-002-000
P/N REV : A-1
DWG. VER : 1
SO# :

DESCRIPTION : Hay Bale Trailer -Scissor Weldment
MATERIAL : "
ROUTING :
CUSTOMER : STD. PRODUCT

PROPRIETARY AND CONFIDENTIAL : THE INFORMATION CONTAINED IN THIS DRAWING IS THE SOLE PROPERTY OF WELD PROJECTS. ANY REPRODUCTION, IN PART OR AS A WHOLE, WITHOUT WRITTEN PERMISSION OF WELD PROJECTS IS PROHIBITED.

ITEM	PART NUMBER	DESCRIPTION	REV	QTY.
6	HAYB-063-000	Hay Bale Trailer - Scissor - Front	A-1	2
7	HAYB-063-001	Hay Bale Trailer - Scissor - Tube Cap	A-1	2
8	HAYB-063-002	Hay Bale Trailer - Scissor - Drag	A-1	2

STEP 1

USING THE TABS AND SLOTS ALIGN AND WELD (6) AND (8), THEN INSERT (7) AND WELD

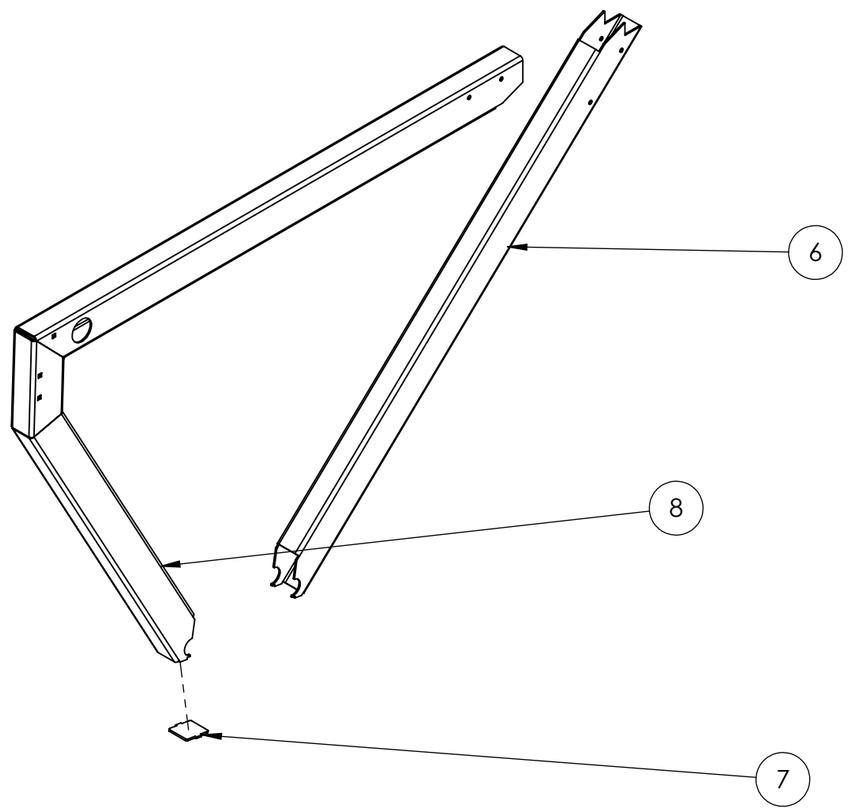

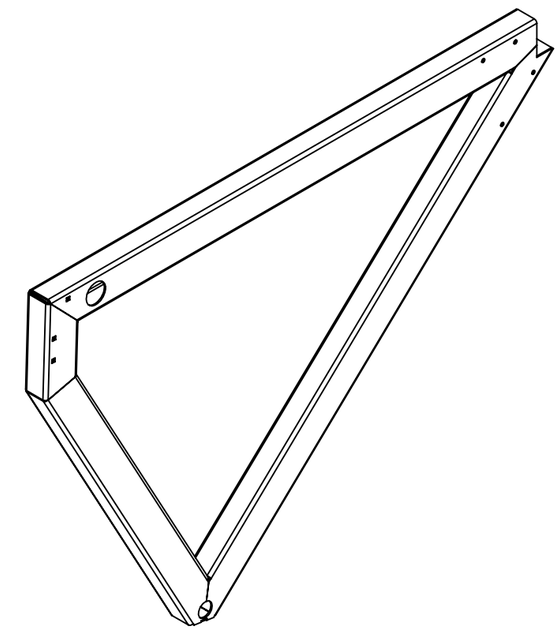

WELD PROJECTS
101 INDUSTRIAL CT, CONROE, TX 77301
PH: 281-238-9652

UNLESS OTHERWISE SPECIFIED
DIMENSIONS ARE IN INCHES
TOLERANCES:
FRACTIONAL ±1/16
ANGULAR: BEND ±1° MACH ±0.5°
DIMENSIONAL TOLERANCE ± 0.015
DO NOT SCALE DRAWING

	NAME	DATE
DRAWN	Noe F	10/15/25
CHECKED		
MFG. APPR.		
Q.A. APPR.		

COMMENTS :

PART # HAYB-002-000
P/N REV : A-1
DWG. VER : 1
SO# :

DESCRIPTION : Hay Bale Trailer -Scissor Weldment
MATERIAL : "
ROUTING :
CUSTOMER : STD. PRODUCT

PROPRIETARY AND CONFIDENTIAL : THE INFORMATION CONTAINED IN THIS DRAWING IS THE SOLE PROPERTY OF WELD PROJECTS. ANY REPRODUCTION, IN PART OR AS A WHOLE, WITHOUT WRITTEN PERMISSION OF WELD PROJECTS IS PROHIBITED.

STEP 2

FIRST WE NEED TO PRESS FIT (3) INTO (12), THEN WELD (12) TO THE PREVIOUS WELDMENT

THEN WE CAN WELD (10) & (13) TO THEIR DESIGNATED SLOTS

THEN WE NEED TO WELD (15) TO THE OPPOSITE SIDE WHERE WE WELDED (10) & (13)

THEN USING (11) AS A GUIDE, WELD (16)

ITEM	PART NUMBER	DESCRIPTION	REV	QTY.
3	2938T25	High-Load Oil-Embedded Sleeve Bearing		4
10	HAYB-065-000	Hay Bale Trailer - Chain Holder	A-1	2
11	HAYB-066-000	Hay Bale Trailer - Skewer Sleeve	A-1	2
12	HAYB-067-000	Hay Bale Trailer - Scissor Reinforcement	A-1	4
13	HAYB-068-000	Hay Bale Trailer - Chain Retainer Hook	A-1	2
15	HAYB-070-000	Hay Bale Trailer - Scissor Upper Reinforcement Inside	A-1	2
16	HAYB-070-001	Hay Bale Trailer - Scissor Upper Reinforcement Outside	A-1	2

DO NOT WELD (11) YET. SINCE THIS WILL BE ALIGNED WHEN ALL THE TRAILER IS FULLY ASSEMBLED

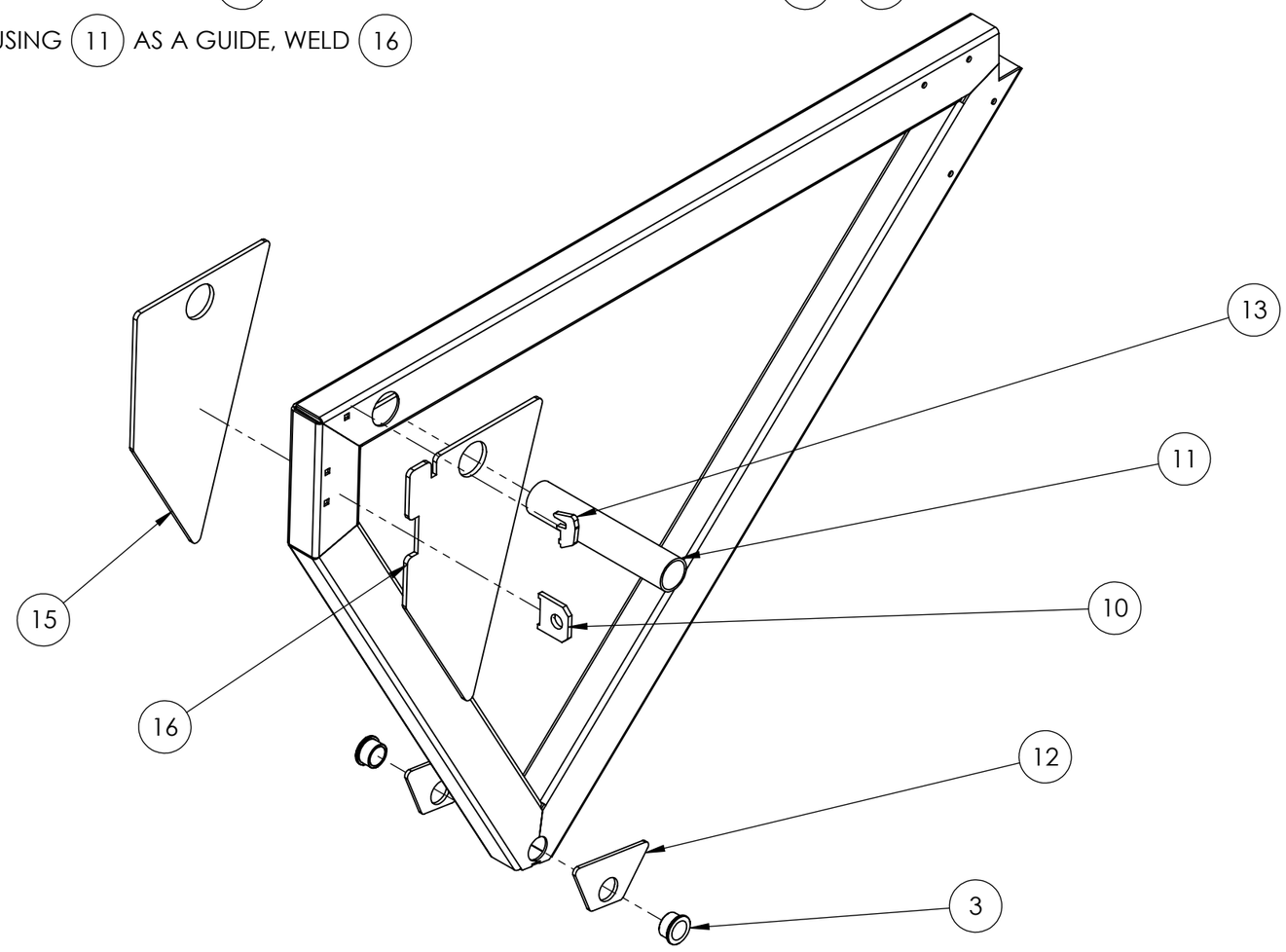

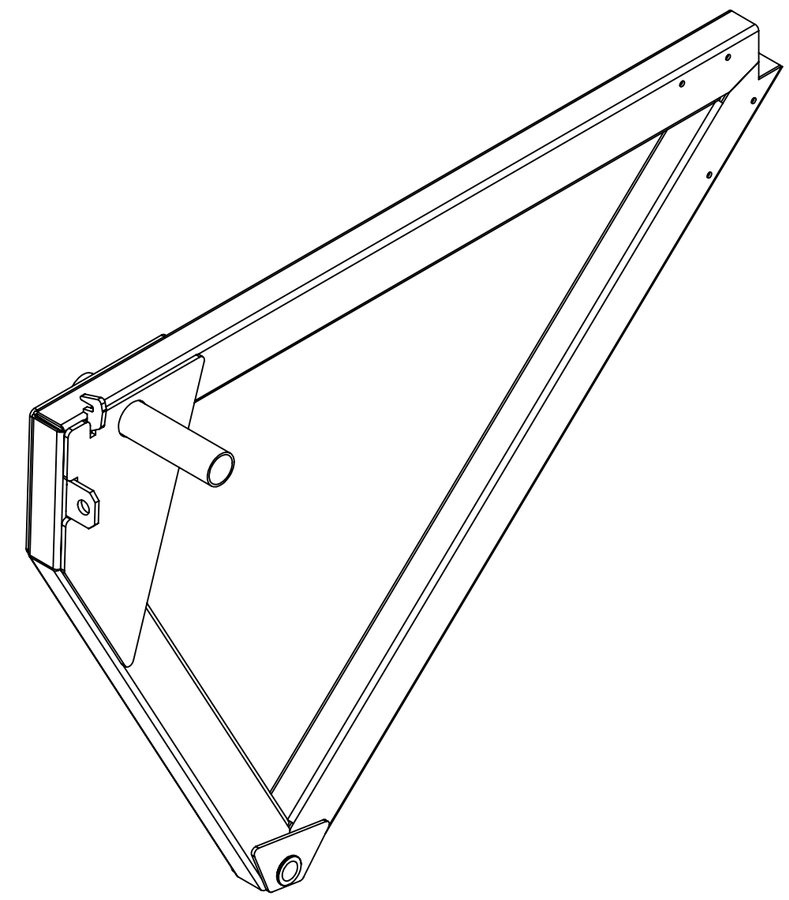

WELD PROJECTS
101 INDUSTRIAL CT, CONROE, TX 77301
PH: 281-238-9652

UNLESS OTHERWISE SPECIFIED
DIMENSIONS ARE IN INCHES
TOLERANCES:
FRACTIONAL ±1/16
ANGULAR: BEND ±1° MACH ±0.5°
DIMENSIONAL TOLERANCE ± 0.015
DO NOT SCALE DRAWING

	NAME	DATE
DRAWN	Noe F	10/15/25
CHECKED		
MFG. APPR.		
Q.A. APPR.		

COMMENTS :

PART # HAYB-002-000
P/N REV : A-1
DWG. VER : 1
SO# :

DESCRIPTION : Hay Bale Trailer -Scissor Weldment
MATERIAL : "
ROUTING :
CUSTOMER : STD. PRODUCT

PROPRIETARY AND CONFIDENTIAL : THE INFORMATION CONTAINED IN THIS DRAWING IS THE SOLE PROPERTY OF WELD PROJECTS. ANY REPRODUCTION, IN PART OR AS A WHOLE, WITHOUT WRITTEN PERMISSION OF WELD PROJECTS IS PROHIBITED.

ITEM	PART NUMBER	DESCRIPTION	REV	QTY.
4	HAYB-063-000	Hay Bale Trailer - Scissor - Front	A-1	2
5	HAYB-063-001	Hay Bale Trailer - Scissor - Tube Cap	A-1	2
14	HAYB-069-000	Hay Bale Trailer - D Ring Reinforcement Plate	A-1	1

STEP 3

USING THE TABS AND SLOTS, ALIGN AND WELD (5) 2X AND (4). AFTER THAT CENTER AS BEST AS POSSIBLE (14) TO (4) AND WELD

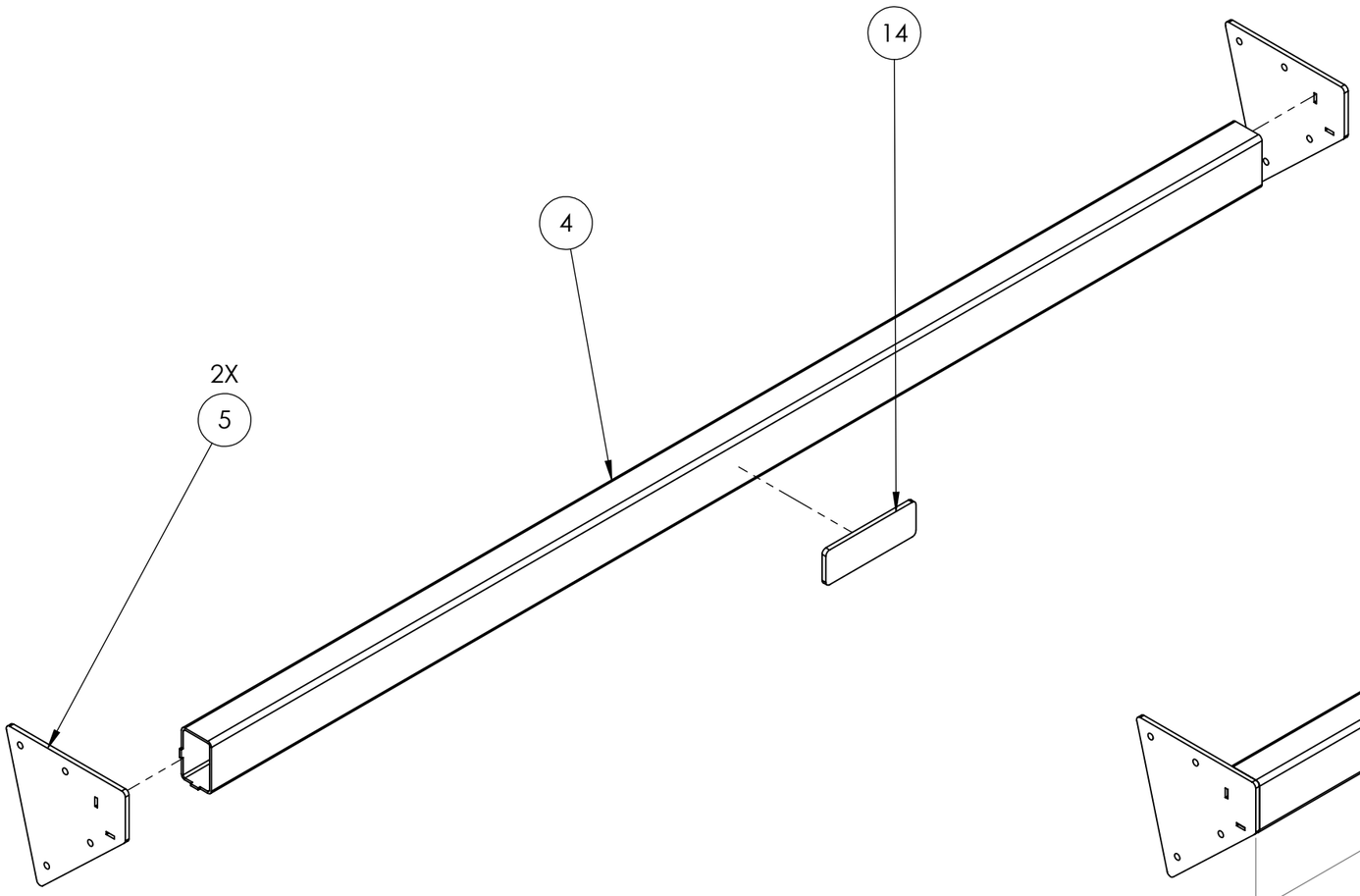

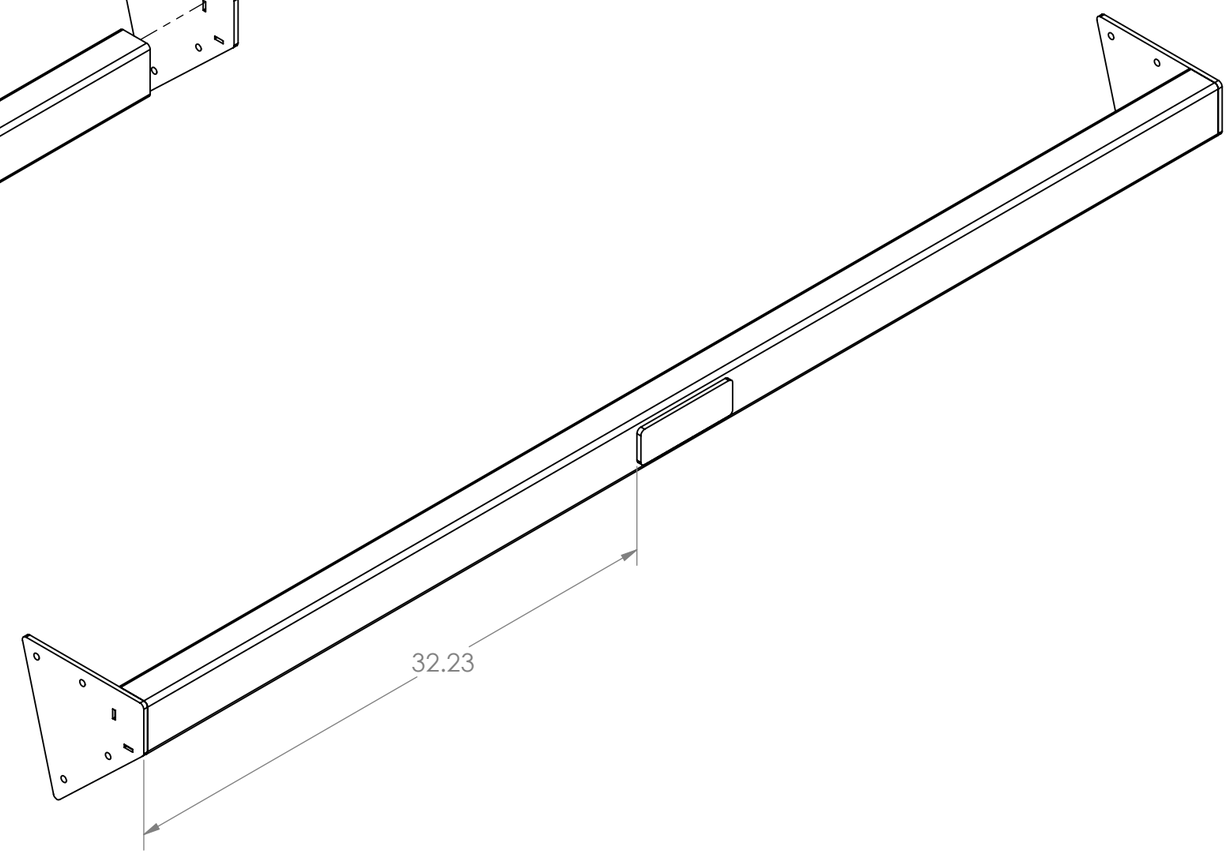

WELD PROJECTS
101 INDUSTRIAL CT, CONROE, TX 77301
PH: 281-238-9652

UNLESS OTHERWISE SPECIFIED
DIMENSIONS ARE IN INCHES
TOLERANCES:
FRACTIONAL ±1/16
ANGULAR: BEND ±1° MACH ±0.5°
DIMENSIONAL TOLERANCE ± 0.015
DO NOT SCALE DRAWING

	NAME	DATE
DRAWN	Noe F	10/15/25
CHECKED		
MFG. APPR.		
Q.A. APPR.		

COMMENTS :

PART # HAYB-002-000
P/N REV : A-1
DWG. VER : 1
SO# :

DESCRIPTION : Hay Bale Trailer -Scissor Weldment
MATERIAL : "
ROUTING :
CUSTOMER : STD. PRODUCT

PROPRIETARY AND CONFIDENTIAL : THE INFORMATION CONTAINED IN THIS DRAWING IS THE SOLE PROPERTY OF WELD PROJECTS. ANY REPRODUCTION, IN PART OR AS A WHOLE, WITHOUT WRITTEN PERMISSION OF WELD PROJECTS IS PROHIBITED.

ITEM	PART NUMBER	DESCRIPTION	REV	QTY.
1	.25" nut	0.25"-20 - Steel Hex Nut	A-1	8
2	.25"- 3" Bolt	Hex Screw 0.25" - 3	A-1	8
4	HAYB-061-000	Hay Bale Trailer - D-Ring CrossBar	A-1	1
8	HAYB-063-002	Hay Bale Trailer - Scissor - Drag	A-1	2
9	HAYB-064-000	Hay Bale Trailer - Gusset 8in	A-1	2
17	Tie Down Ring	Weld-on Tie-Down Ring		1

STEP 4

USING THE NOTCHES FOUND ON (8) (2X) PLACE (4), TO ENSURE A GOOD ALIGNMENT USE (1) (8X) (2) (8X) TO FIXTURE THEM TOGETHER

NOW TO ENSURE 90°, WELD (9) (2X) TO THE PREVIOUS WELDMENT, ALSO IT IS A GOOD TIME TO WELD (17) .

THIS ASSEMBLY IS BOLTED TOGETHER TO MAKE SERVICE EASIER IN CASE SOMETHING BREAKS.

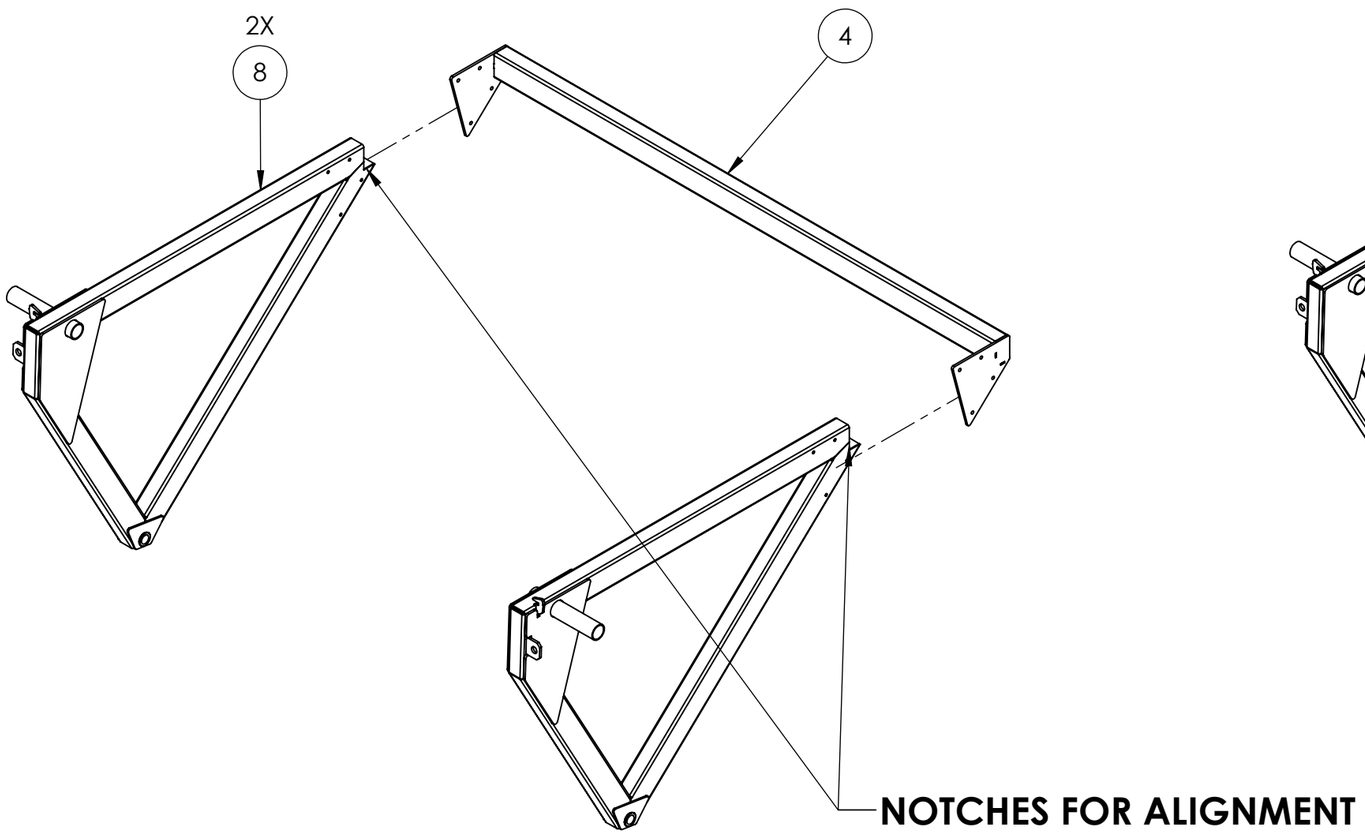

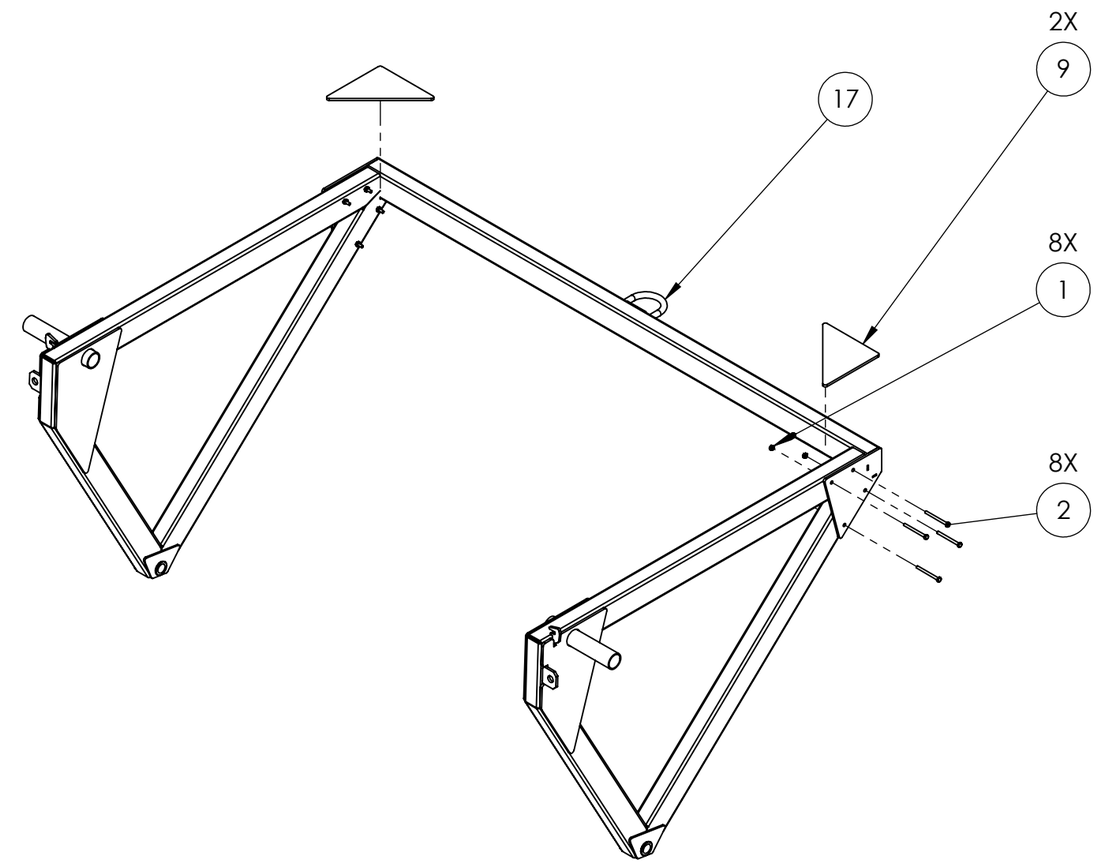

WELD PROJECTS

101 INDUSTRIAL CT, CONROE, TX 77301
PH: 281-238-9652

UNLESS OTHERWISE SPECIFIED
DIMENSIONS ARE IN INCHES
TOLERANCES:
FRACTIONAL ±1/16
ANGULAR: BEND ±1° MACH ±0.5°
DIMENSIONAL TOLERANCE ± 0.015
DO NOT SCALE DRAWING

	NAME	DATE
DRAWN	Noe F	10/15/25
CHECKED		
MFG. APPR.		
Q.A. APPR.		

COMMENTS :

PART # HAYB-002-000
P/N REV : A-1
DWG. VER : 1
SO# :

DESCRIPTION : Hay Bale Trailer -Scissor Weldment
MATERIAL : "
ROUTING :
CUSTOMER : STD. PRODUCT

PROPRIETARY AND CONFIDENTIAL : THE INFORMATION CONTAINED IN THIS DRAWING IS THE SOLE PROPERTY OF WELD PROJECTS. ANY REPRODUCTION, IN PART OR AS A WHOLE, WITHOUT WRITTEN PERMISSION OF WELD PROJECTS IS PROHIBITED.

REVISIONS			
REV.	DESCRIPTION	DATE	APPROVED

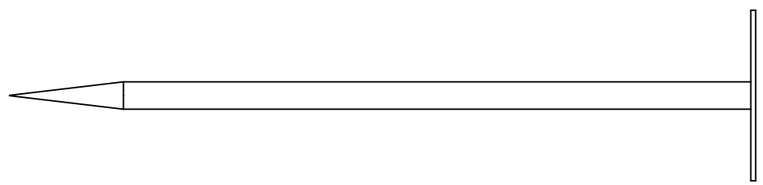

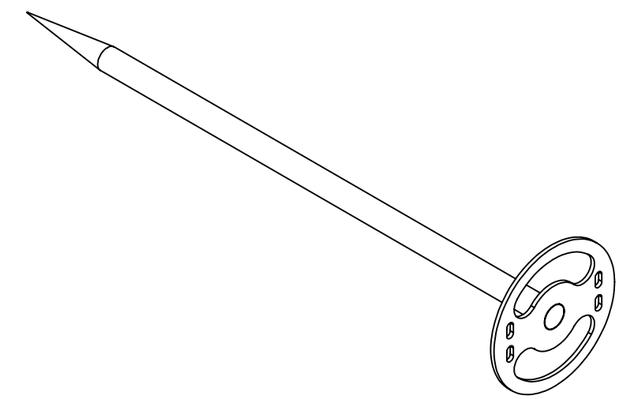

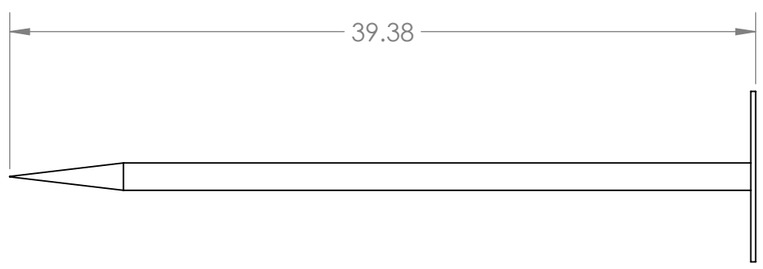

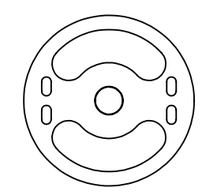

WELD PROJECTS
101 INDUSTRIAL CT, CONROE, TX 77301
PH: 281-238-9652

UNLESS OTHERWISE SPECIFIED
DIMENSIONS ARE IN INCHES
TOLERANCES:
FRACTIONAL ±1/16
ANGULAR: BEND ±1° MACH ±0.5°
DIMENSIONAL TOLERANCE ± 0.015
DO NOT SCALE DRAWING

	NAME	DATE
DRAWN	Noe F	10/15/25
CHECKED		
MFG. APPR.		
Q.A. APPR.		

COMMENTS :

PART # HAYB-003-000
P/N REV : A-1
DWG. VER : 1
SO# :

DESCRIPTION : Hay Bale Trailer -Skewer Weldment
MATERIAL : "
ROUTING :
CUSTOMER : STD. PRODUCT

PROPRIETARY AND CONFIDENTIAL : THE INFORMATION CONTAINED IN THIS DRAWING IS THE SOLE PROPERTY OF WELD PROJECTS. ANY REPRODUCTION, IN PART OR AS A WHOLE, WITHOUT WRITTEN PERMISSION OF WELD PROJECTS IS PROHIBITED.

ITEM	PART NUMBER	DESCRIPTION	Material Gauge	MATERIAL	REV	QTY.
1	HAYB-072-000	Hay Bale Trailer - Skewer Handle	0.25"	ASTM A36 Steel	A-1	1
2	HAYB-071-000	Hay Bale Trailer - Skewer	1 7/16" Solid bar	ASTM A36 Steel	A-1	1

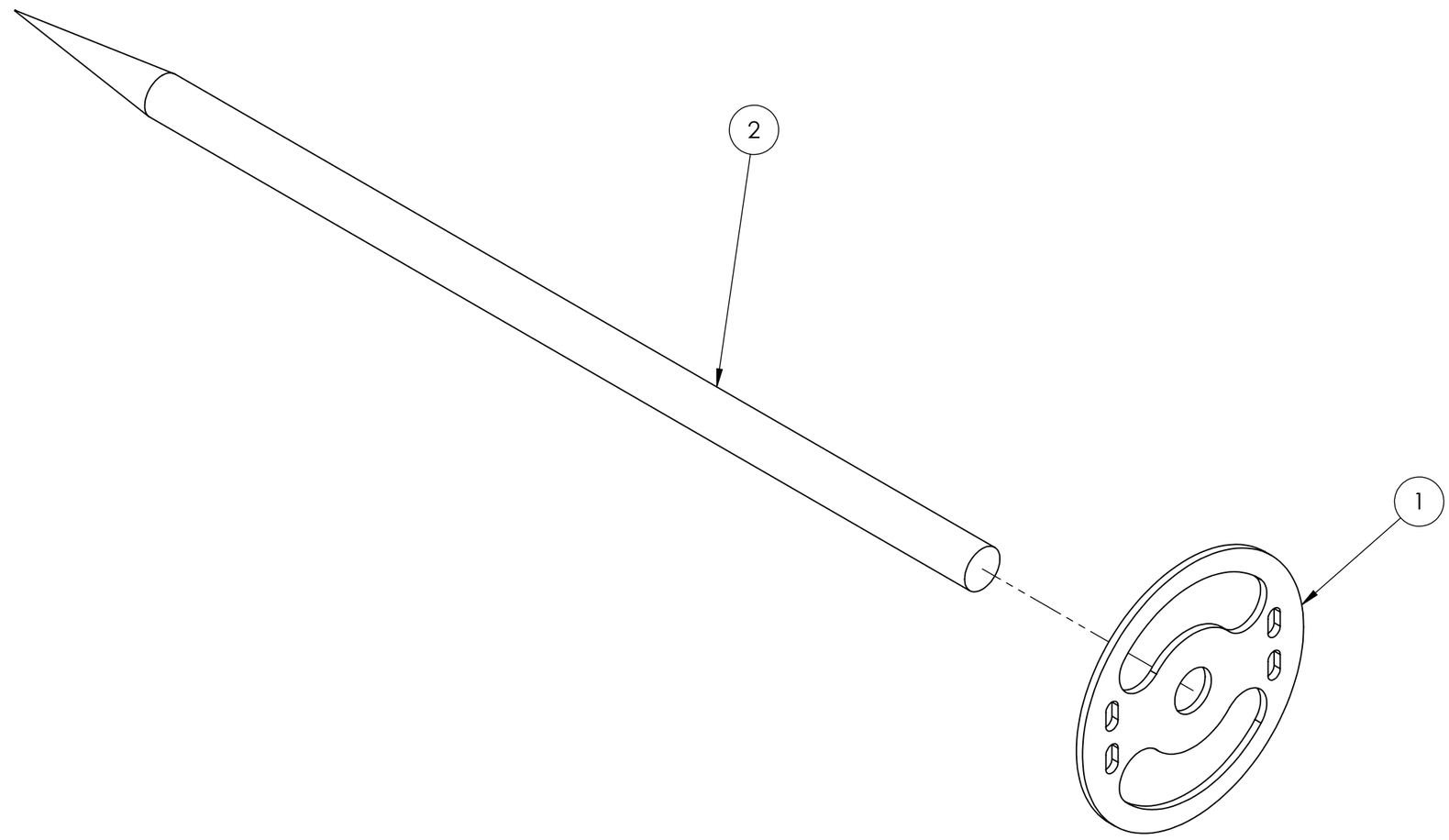

WELD PROJECTS
101 INDUSTRIAL CT, CONROE, TX 77301
PH: 281-238-9652

UNLESS OTHERWISE SPECIFIED
DIMENSIONS ARE IN INCHES
TOLERANCES:
FRACTIONAL ±1/16
ANGULAR: BEND ±1° MACH ±0.5°
DIMENSIONAL TOLERANCE ± 0.015
DO NOT SCALE DRAWING

	NAME	DATE
DRAWN	Noe F	10/15/25
CHECKED		
MFG. APPR.		
Q.A. APPR.		

COMMENTS :

PART # HAYB-003-000
P/N REV : A-1
DWG. VER : 1
SO# :

DESCRIPTION : Hay Bale Trailer -Skewer Weldment
MATERIAL : "
ROUTING :
CUSTOMER : STD. PRODUCT

PROPRIETARY AND CONFIDENTIAL : THE INFORMATION CONTAINED IN THIS DRAWING IS THE SOLE PROPERTY OF WELD PROJECTS. ANY REPRODUCTION, IN PART OR AS A WHOLE, WITHOUT WRITTEN PERMISSION OF WELD PROJECTS IS PROHIBITED.

REVISIONS			
REV.	DESCRIPTION	DATE	APPROVED

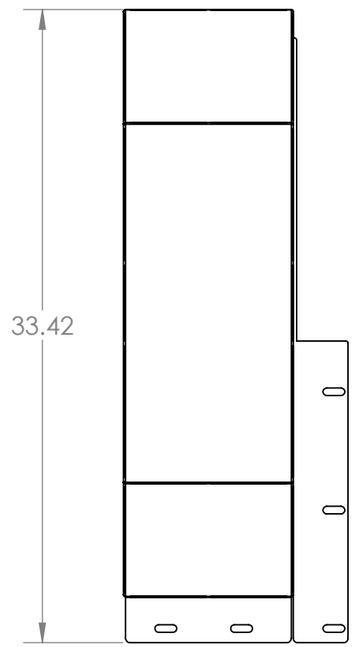

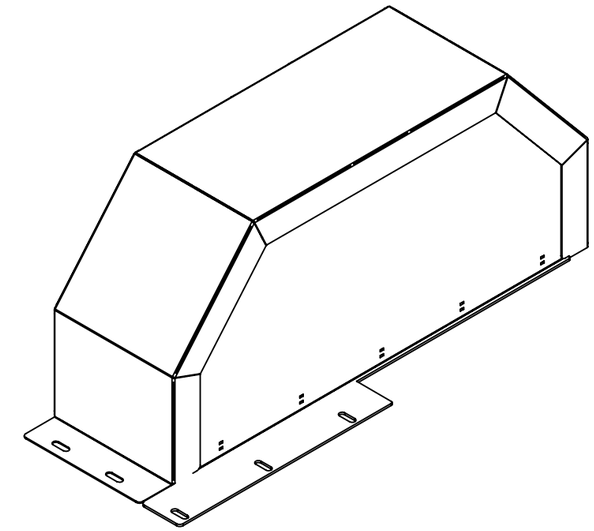

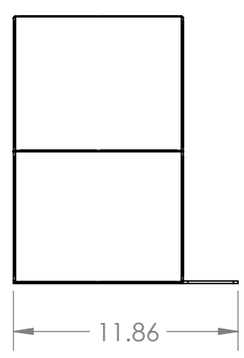

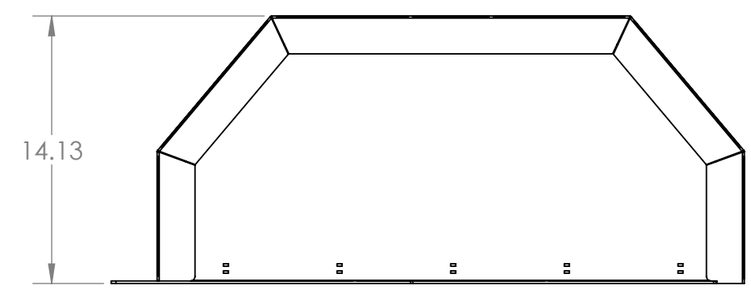

TEXAS METAL WORKS
101 INDUSTRIAL CT, CONROE, TX 77301
PH: 281-238-9652

UNLESS OTHERWISE SPECIFIED
DIMENSIONS ARE IN INCHES
TOLERANCES:
FRACTIONAL ±1/16
ANGULAR: BEND ±1° MACH ±0.5°
DIMENSIONAL TOLERANCE ± 0.015
DO NOT SCALE DRAWING

	NAME	DATE
DRAWN	Noe F	10/15/25
CHECKED		
MFG. APPR.		
Q.A. APPR.		

COMMENTS :

PART # HAYB-004-000
P/N REV : A-1
DWG. VER : 1
SO# :

DESCRIPTION : Hay Bale Trailer - Fender Weldment - Right
MATERIAL :
ROUTING :
CUSTOMER : STD. PRODUCT

PROPRIETARY AND CONFIDENTIAL : THE INFORMATION CONTAINED IN THIS DRAWING IS THE SOLE PROPERTY OF TEXAS METAL WORKS. ANY REPRODUCTION, IN PART OR AS A WHOLE, WITHOUT WRITTEN PERMISSION OF TEXAS METAL WORKS IS PROHIBITED.

ITEM	PART NUMBER	DESCRIPTION	REV	QTY.
1	HAYB-073-000	Hay Bale Trailer - Fender Right	A-1	1
2	HAYB-073-002	Hay Bale Trailer - Fender Base - Right	A-1	1

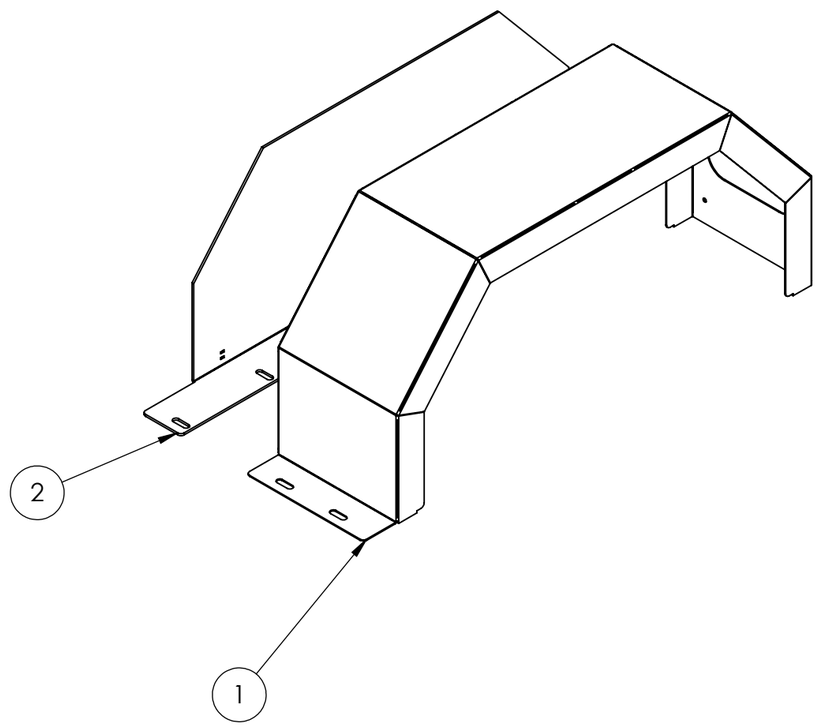

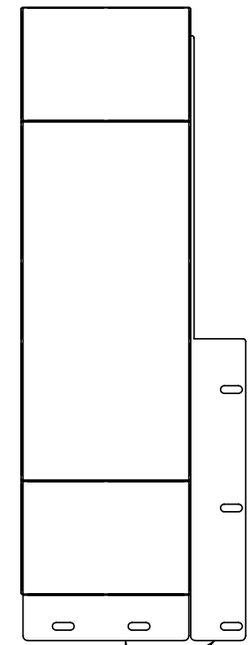

MAKE AS FLUSH AS POSSIBLE

Ensure that (2) is overlaping (1) by 1/2" from the inside

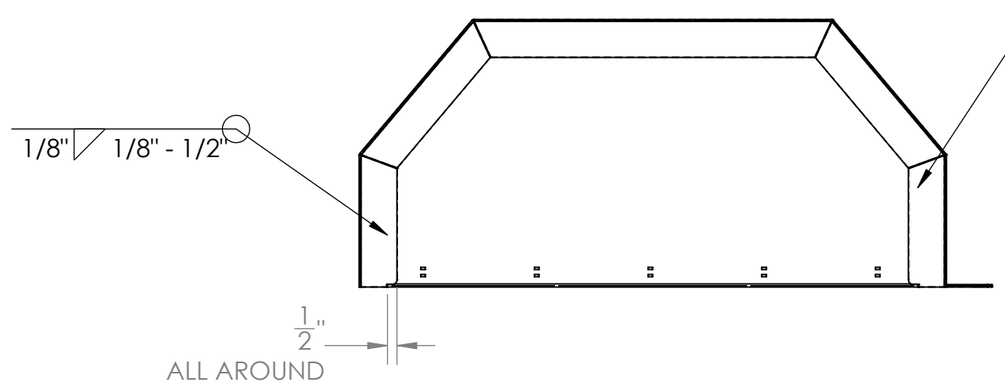

THIS HAS A LEFT AND RIGHT VERSION

TEXAS METAL WORKS
101 INDUSTRIAL CT, CONROE, TX 77301
PH: 281-238-9652

UNLESS OTHERWISE SPECIFIED
DIMENSIONS ARE IN INCHES
TOLERANCES:
FRACTIONAL ±1/16
ANGULAR: BEND ±1° MACH ±0.5°
DIMENSIONAL TOLERANCE ± 0.015
DO NOT SCALE DRAWING

	NAME	DATE
DRAWN	Noe F	10/15/25
CHECKED		
MFG. APPR.		
Q.A. APPR.		

COMMENTS :

PART # HAYB-004-000
P/N REV : A-1
DWG. VER : 1
SO# :

DESCRIPTION : Hay Bale Trailer - Fender Weldment - Right
MATERIAL :
ROUTING :
CUSTOMER : STD. PRODUCT

PROPRIETARY AND CONFIDENTIAL : THE INFORMATION CONTAINED IN THIS DRAWING IS THE SOLE PROPERTY OF TEXAS METAL WORKS. ANY REPRODUCTION, IN PART OR AS A WHOLE, WITHOUT WRITTEN PERMISSION OF TEXAS METAL WORKS IS PROHIBITED.

REVISIONS			
REV.	DESCRIPTION	DATE	APPROVED

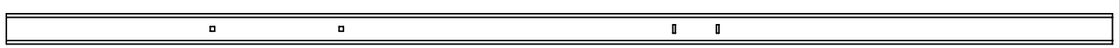

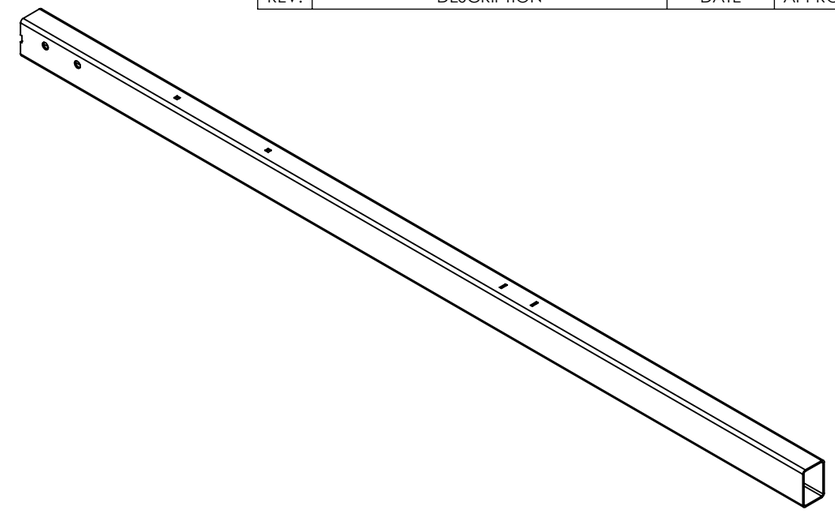

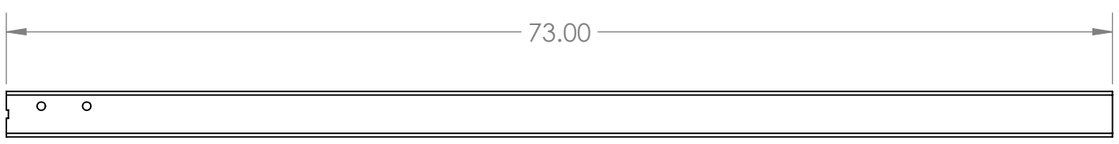

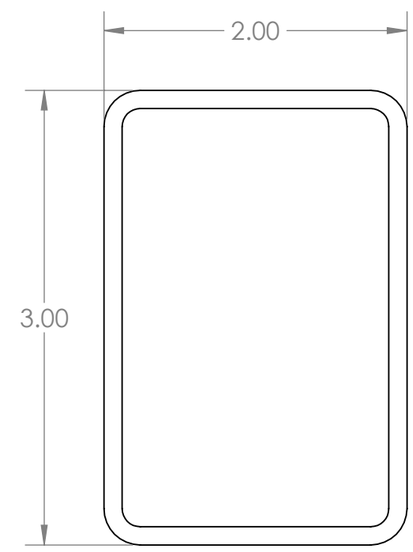

WELD PROJECTS
101 INDUSTRIAL CT, CONROE, TX 77301
PH: 281-238-9652

UNLESS OTHERWISE SPECIFIED
DIMENSIONS ARE IN INCHES
TOLERANCES:
FRACTIONAL ±1/16
ANGULAR: BEND ±1° MACH ±0.5°
DIMENSIONAL TOLERANCE ± 0.015
DO NOT SCALE DRAWING

	NAME	DATE
DRAWN	Noe F	10/15/25
CHECKED		
MFG. APPR.		
Q.A. APPR.		

COMMENTS :

PART # HAYB-050-000
P/N REV : A-1
DWG. VER : 1
SO# :

DESCRIPTION : Hay Bale Trailer - Tongue
MATERIAL : 2x3_0.12" ASTM A36 Steel
ROUTING :
CUSTOMER : STD. PRODUCT

PROPRIETARY AND CONFIDENTIAL : THE INFORMATION CONTAINED IN THIS DRAWING IS THE SOLE PROPERTY OF WELD PROJECTS. ANY REPRODUCTION, IN PART OR AS A WHOLE, WITHOUT WRITTEN PERMISSION OF WELD PROJECTS IS PROHIBITED.

REVISIONS			
REV.	DESCRIPTION	DATE	APPROVED

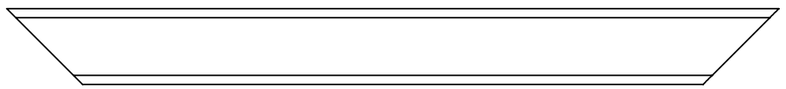

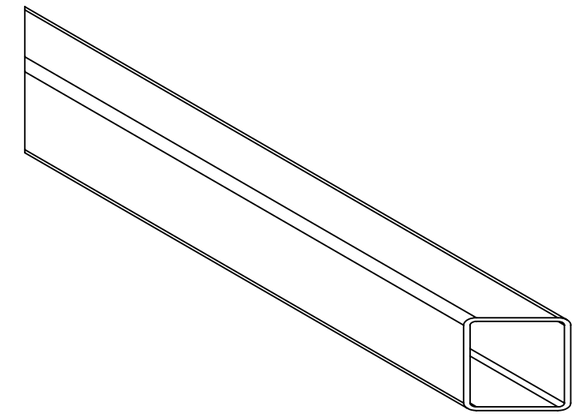

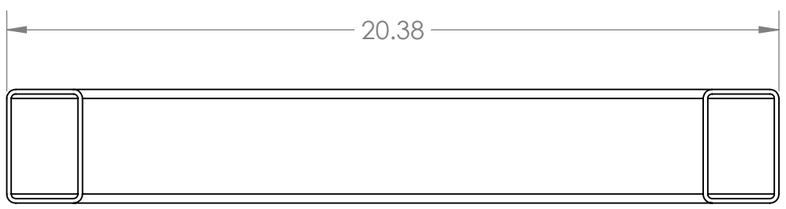

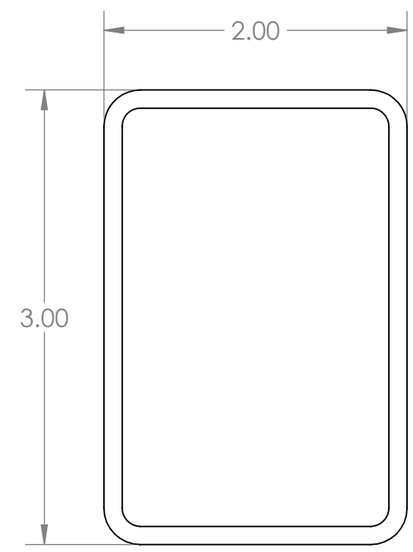

WELD PROJECTS
101 INDUSTRIAL CT, CONROE, TX 77301
PH: 281-238-9652

UNLESS OTHERWISE SPECIFIED
DIMENSIONS ARE IN INCHES
TOLERANCES:
FRACTIONAL ±1/16
ANGULAR: BEND ±1° MACH ±0.5°
DIMENSIONAL TOLERANCE ± 0.015
DO NOT SCALE DRAWING

	NAME	DATE
DRAWN	Noe F	10/15/25
CHECKED		
MFG. APPR.		
Q.A. APPR.		

COMMENTS :

PART # HAYB-050-001
P/N REV : A-1
DWG. VER : 1
SO# :

DESCRIPTION : Hay Bale Trailer - Tongue Reinforcement
MATERIAL : 2x3_0.12" ASTM A36 Steel
ROUTING :
CUSTOMER : STD. PRODUCT

PROPRIETARY AND CONFIDENTIAL : THE INFORMATION CONTAINED IN THIS DRAWING IS THE SOLE PROPERTY OF WELD PROJECTS. ANY REPRODUCTION, IN PART OR AS A WHOLE, WITHOUT WRITTEN PERMISSION OF WELD PROJECTS IS PROHIBITED.

REVISIONS			
REV.	DESCRIPTION	DATE	APPROVED

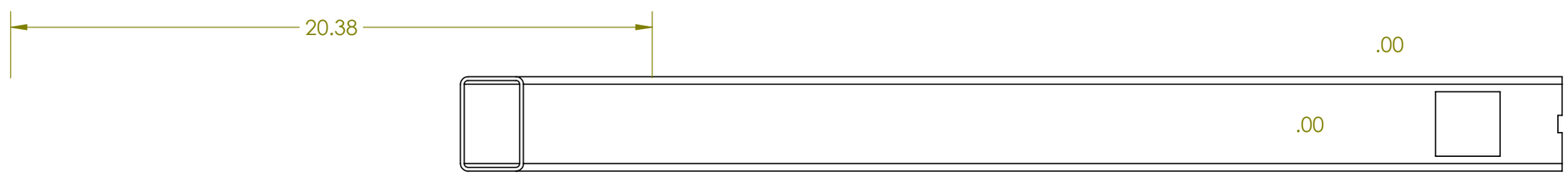

WELD PROJECTS
101 INDUSTRIAL CT, CONROE, TX 77301
PH: 281-238-9652

UNLESS OTHERWISE SPECIFIED
DIMENSIONS ARE IN INCHES
TOLERANCES:
FRACTIONAL ±1/16
ANGULAR: BEND ±1° MACH ±0.5°
DIMENSIONAL TOLERANCE ± 0.015
DO NOT SCALE DRAWING

	NAME	DATE
DRAWN	Noe F	10/15/25
CHECKED		
MFG. APPR.		
Q.A. APPR.		

COMMENTS :

PART # HAYB-050-002
P/N REV : A-1
DWG. VER : 1
SO# :

DESCRIPTION : Hay Bale Trailer - Left Side
MATERIAL : 2x3_0.12" ASTM A36 Steel
ROUTING :
CUSTOMER : STD. PRODUCT

PROPRIETARY AND CONFIDENTIAL : THE INFORMATION CONTAINED IN THIS DRAWING IS THE SOLE PROPERTY OF WELD PROJECTS. ANY REPRODUCTION, IN PART OR AS A WHOLE, WITHOUT WRITTEN PERMISSION OF WELD PROJECTS IS PROHIBITED.

REVISIONS			
REV.	DESCRIPTION	DATE	APPROVED

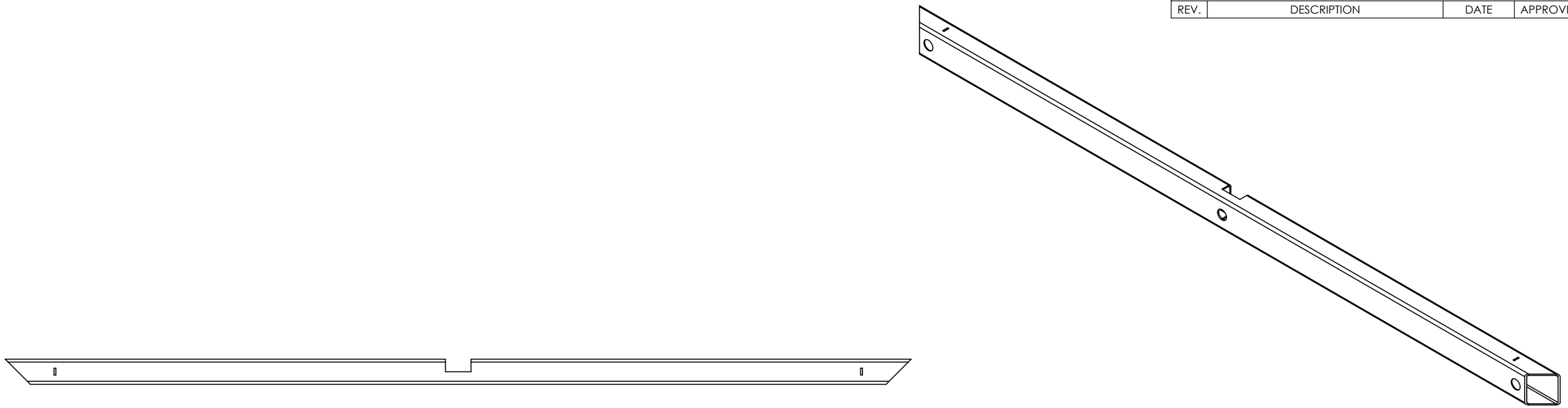

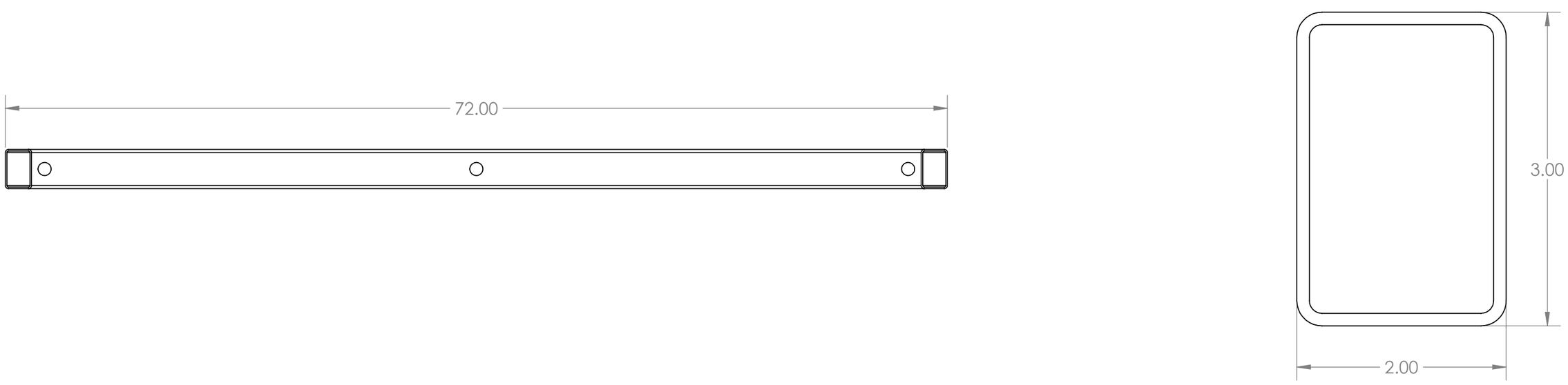

WELD PROJECTS
101 INDUSTRIAL CT, CONROE, TX 77301
PH: 281-238-9652

UNLESS OTHERWISE SPECIFIED
DIMENSIONS ARE IN INCHES
TOLERANCES:
FRACTIONAL ±1/16
ANGULAR: BEND ±1° MACH ±0.5°
DIMENSIONAL TOLERANCE ± 0.015
DO NOT SCALE DRAWING

	NAME	DATE
DRAWN	Noe F	10/15/25
CHECKED		
MFG. APPR.		
Q.A. APPR.		

COMMENTS :

PART # HAYB-050-003
P/N REV : A-1
DWG. VER : 1
SO# :

DESCRIPTION : Hay Bale Trailer - Mid Cross Member
MATERIAL : 2x3_0.12" ASTM A36 Steel
ROUTING :
CUSTOMER : STD. PRODUCT

PROPRIETARY AND CONFIDENTIAL : THE INFORMATION CONTAINED IN THIS DRAWING IS THE SOLE PROPERTY OF WELD PROJECTS. ANY REPRODUCTION, IN PART OR AS A WHOLE, WITHOUT WRITTEN PERMISSION OF WELD PROJECTS IS PROHIBITED.

REVISIONS			
REV.	DESCRIPTION	DATE	APPROVED

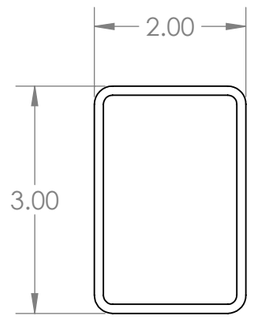

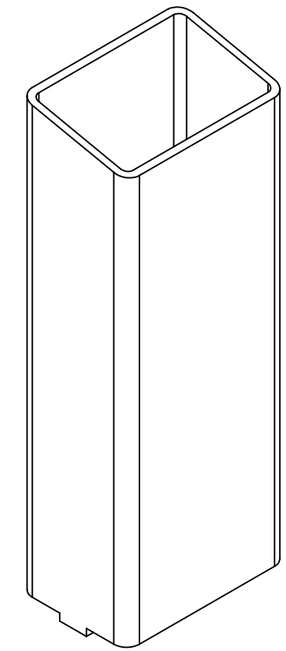

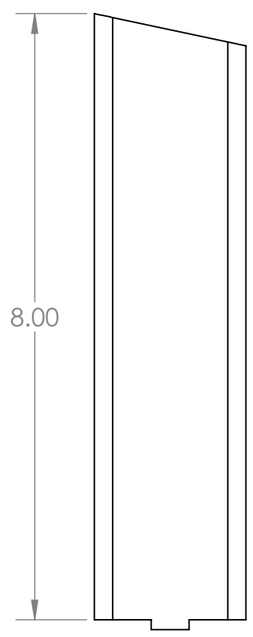

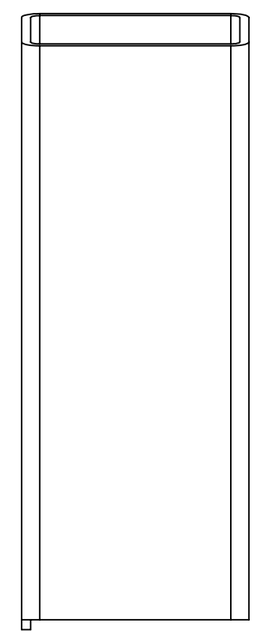

WELD PROJECTS
101 INDUSTRIAL CT, CONROE, TX 77301
PH: 281-238-9652

UNLESS OTHERWISE SPECIFIED
DIMENSIONS ARE IN INCHES
TOLERANCES:
FRACTIONAL ±1/16
ANGULAR: BEND ±1° MACH ±0.5°
DIMENSIONAL TOLERANCE ± 0.015
DO NOT SCALE DRAWING

	NAME	DATE
DRAWN	Noe F	10/15/25
CHECKED		
MFG. APPR.		
Q.A. APPR.		

COMMENTS :

PART # HAYB-050-004
P/N REV : A-1
DWG. VER : 1
SO# :

DESCRIPTION : Hay Bale Trailer - Upright Left
MATERIAL : 2x3_0.12" ASTM A36 Steel
ROUTING :
CUSTOMER : STD. PRODUCT

PROPRIETARY AND CONFIDENTIAL : THE INFORMATION CONTAINED IN THIS DRAWING IS THE SOLE PROPERTY OF WELD PROJECTS. ANY REPRODUCTION, IN PART OR AS A WHOLE, WITHOUT WRITTEN PERMISSION OF WELD PROJECTS IS PROHIBITED.

REVISIONS			
REV.	DESCRIPTION	DATE	APPROVED

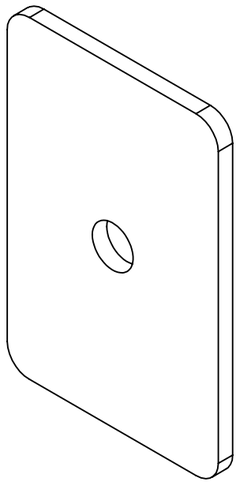

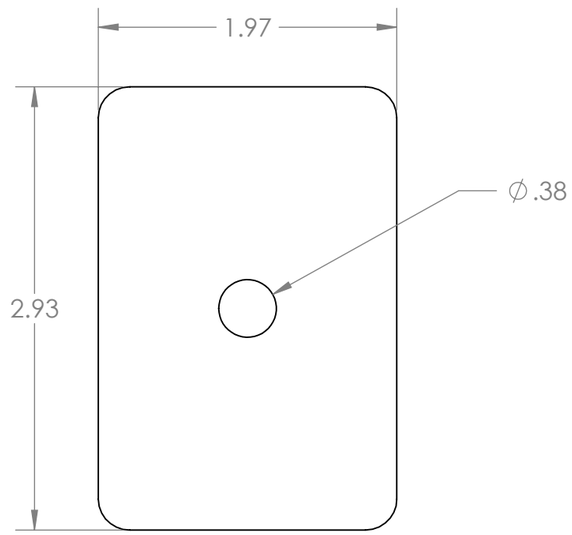

WELD PROJECTS
101 INDUSTRIAL CT, CONROE, TX 77301
PH: 281-238-9652

UNLESS OTHERWISE SPECIFIED
DIMENSIONS ARE IN INCHES
TOLERANCES:
FRACTIONAL ±1/16
ANGULAR: BEND ±1° MACH ±0.5°
DIMENSIONAL TOLERANCE ± 0.015
DO NOT SCALE DRAWING

	NAME	DATE
DRAWN	Noe F	10/15/25
CHECKED		
MFG. APPR.		
Q.A. APPR.		

COMMENTS :

PART # HAYB-050-005
P/N REV : A-1
DWG. VER : 1
SO# :

DESCRIPTION : Hay Bale Trailer - Upright Cap
MATERIAL : 0.135" ASTM A36 Steel
ROUTING :
CUSTOMER : STD. PRODUCT

PROPRIETARY AND CONFIDENTIAL : THE INFORMATION CONTAINED IN THIS DRAWING IS THE SOLE PROPERTY OF WELD PROJECTS. ANY REPRODUCTION, IN PART OR AS A WHOLE, WITHOUT WRITTEN PERMISSION OF WELD PROJECTS IS PROHIBITED.

SHEET 1 OF 1

REVISIONS			
REV.	DESCRIPTION	DATE	APPROVED

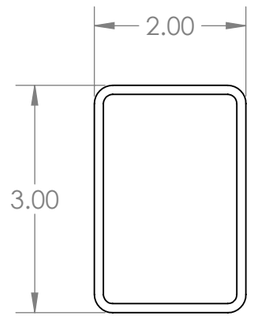

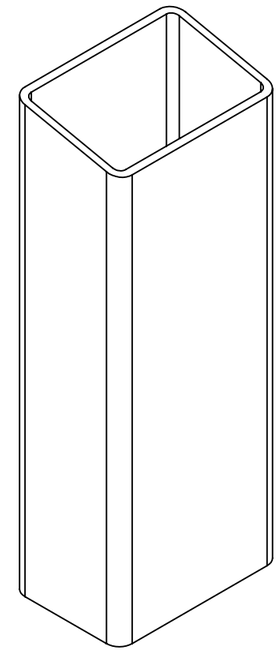

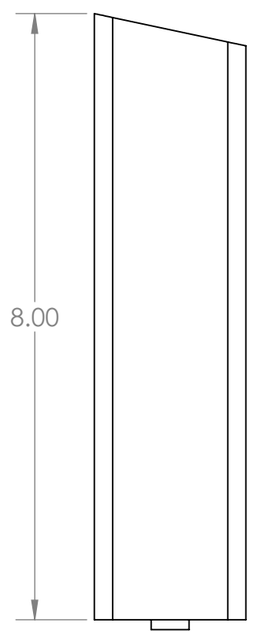

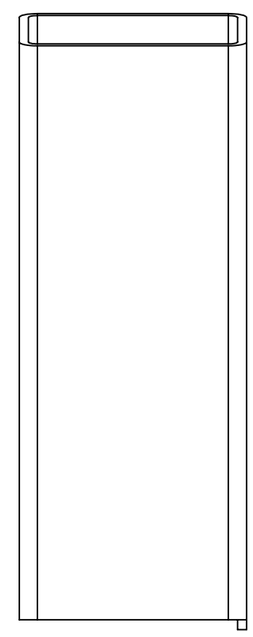

WELD PROJECTS
101 INDUSTRIAL CT, CONROE, TX 77301
PH: 281-238-9652

UNLESS OTHERWISE SPECIFIED
DIMENSIONS ARE IN INCHES
TOLERANCES:
FRACTIONAL ±1/16
ANGULAR: BEND ±1° MACH ±0.5°
DIMENSIONAL TOLERANCE ± 0.015
DO NOT SCALE DRAWING

	NAME	DATE
DRAWN	Noe F	10/15/25
CHECKED		
MFG. APPR.		
Q.A. APPR.		

COMMENTS :

PART # HAYB-050-006
P/N REV : A-1
DWG. VER : 1
SO# :

DESCRIPTION : Hay Bale Trailer - Upright Right
MATERIAL : 2x3_0.12" ASTM A36 Steel
ROUTING :
CUSTOMER : STD. PRODUCT

PROPRIETARY AND CONFIDENTIAL : THE INFORMATION CONTAINED IN THIS DRAWING IS THE SOLE PROPERTY OF WELD PROJECTS. ANY REPRODUCTION, IN PART OR AS A WHOLE, WITHOUT WRITTEN PERMISSION OF WELD PROJECTS IS PROHIBITED.

REVISIONS			
REV.	DESCRIPTION	DATE	APPROVED

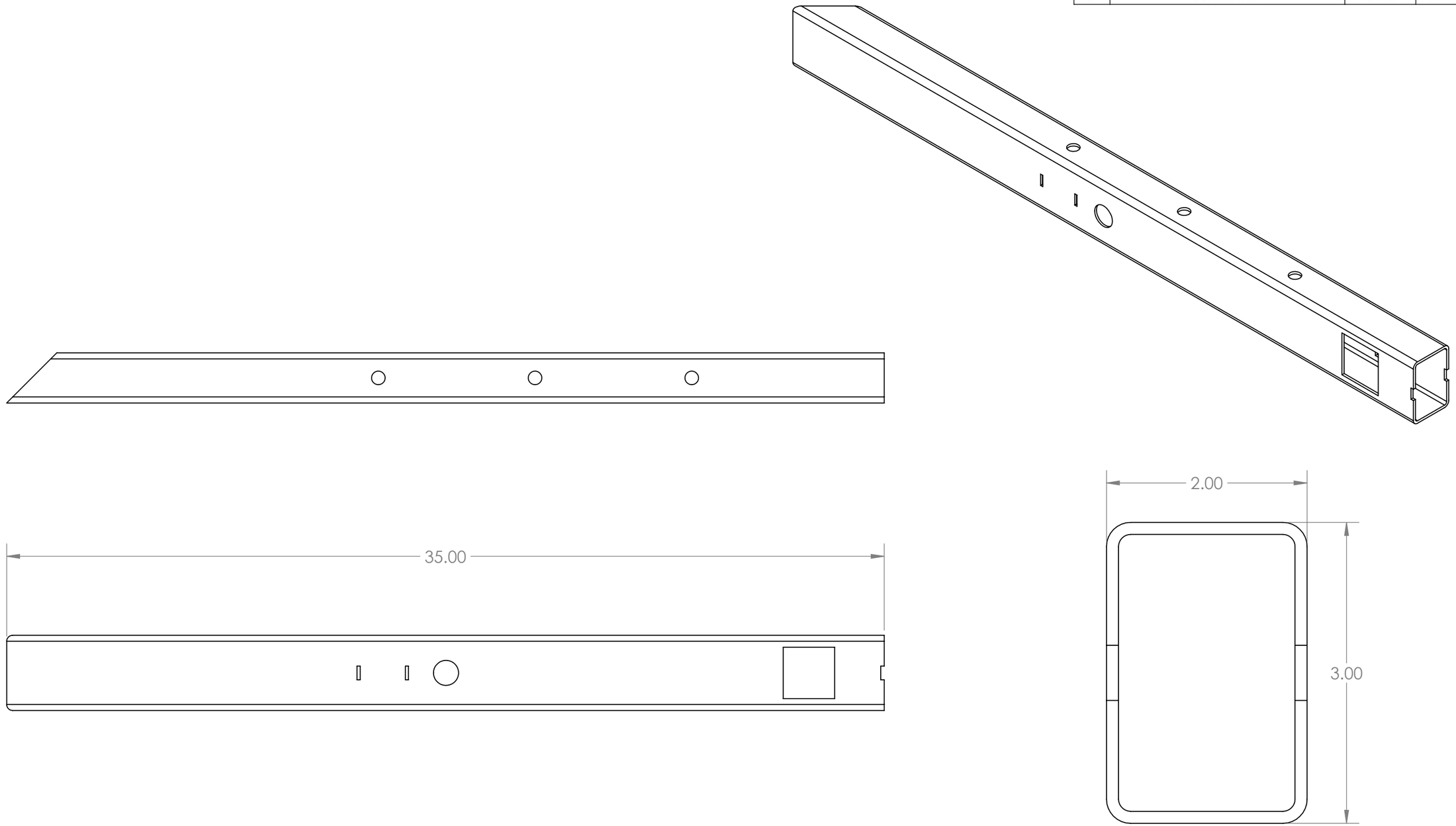

WELD PROJECTS
101 INDUSTRIAL CT, CONROE, TX 77301
PH: 281-238-9652

UNLESS OTHERWISE SPECIFIED
DIMENSIONS ARE IN INCHES
TOLERANCES:
FRACTIONAL ±1/16
ANGULAR: BEND ±1° MACH ±0.5°
DIMENSIONAL TOLERANCE ± 0.015
DO NOT SCALE DRAWING

	NAME	DATE
DRAWN	Noe F	10/15/25
CHECKED		
MFG. APPR.		
Q.A. APPR.		

COMMENTS :

PART # HAYB-050-007
P/N REV : A-1
DWG. VER : 1
SO# :

DESCRIPTION : Hay Bale Trailer - Right Side
MATERIAL : 2x3_0.12" ASTM A36 Steel
ROUTING :
CUSTOMER : STD. PRODUCT

PROPRIETARY AND CONFIDENTIAL : THE INFORMATION CONTAINED IN THIS DRAWING IS THE SOLE PROPERTY OF WELD PROJECTS. ANY REPRODUCTION, IN PART OR AS A WHOLE, WITHOUT WRITTEN PERMISSION OF WELD PROJECTS IS PROHIBITED.

REVISIONS			
REV.	DESCRIPTION	DATE	APPROVED

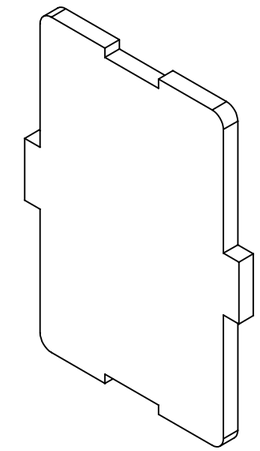

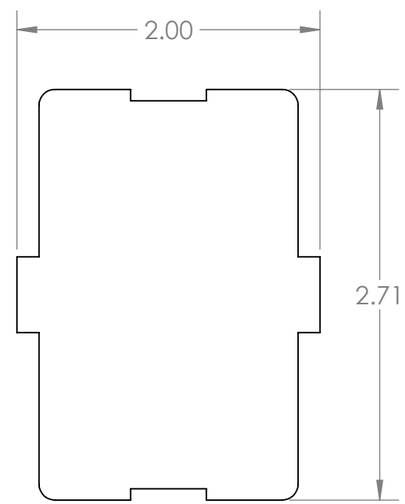

WELD PROJECTS
101 INDUSTRIAL CT, CONROE, TX 77301
PH: 281-238-9652

UNLESS OTHERWISE SPECIFIED
DIMENSIONS ARE IN INCHES
TOLERANCES:
FRACTIONAL ±1/16
ANGULAR: BEND ±1° MACH ±0.5°
DIMENSIONAL TOLERANCE ± 0.015
DO NOT SCALE DRAWING

	NAME	DATE
DRAWN	Noe F	10/15/25
CHECKED		
MFG. APPR.		
Q.A. APPR.		

COMMENTS :

PART # HAYB-051-000
P/N REV : A-1
DWG. VER : 1
SO# :

DESCRIPTION : Hay Bale Trailer - Tube Cap 3x2
MATERIAL : 0.135" ASTM A36 Steel
ROUTING :
CUSTOMER : STD. PRODUCT

PROPRIETARY AND CONFIDENTIAL : THE INFORMATION CONTAINED IN THIS DRAWING IS THE SOLE PROPERTY OF WELD PROJECTS. ANY REPRODUCTION, IN PART OR AS A WHOLE, WITHOUT WRITTEN PERMISSION OF WELD PROJECTS IS PROHIBITED.

REVISIONS			
REV.	DESCRIPTION	DATE	APPROVED

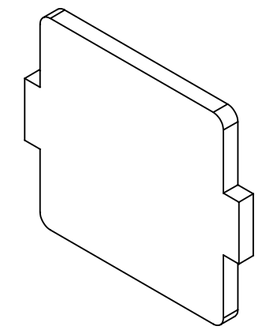

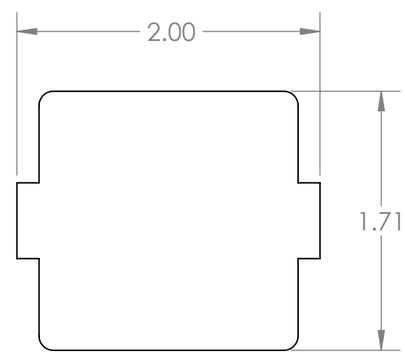

WELD PROJECTS
101 INDUSTRIAL CT, CONROE, TX 77301
PH: 281-238-9652

UNLESS OTHERWISE SPECIFIED
DIMENSIONS ARE IN INCHES
TOLERANCES:
FRACTIONAL ±1/16
ANGULAR: BEND ±1° MACH ±0.5°
DIMENSIONAL TOLERANCE ± 0.015
DO NOT SCALE DRAWING

	NAME	DATE
DRAWN	Noe F	10/15/25
CHECKED		
MFG. APPR.		
Q.A. APPR.		

COMMENTS :

PART # HAYB-051-001
P/N REV : A-1
DWG. VER : 1
SO# :

DESCRIPTION : Hay Bale Trailer - Tube Cap 2x2
MATERIAL : 0.135" ASTM A36 Steel
ROUTING :
CUSTOMER : STD. PRODUCT

PROPRIETARY AND CONFIDENTIAL : THE INFORMATION CONTAINED IN THIS DRAWING IS THE SOLE PROPERTY OF WELD PROJECTS. ANY REPRODUCTION, IN PART OR AS A WHOLE, WITHOUT WRITTEN PERMISSION OF WELD PROJECTS IS PROHIBITED.

SHEET 1 OF 1

REVISIONS			
REV.	DESCRIPTION	DATE	APPROVED

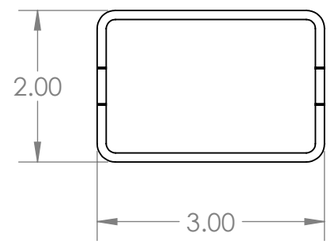

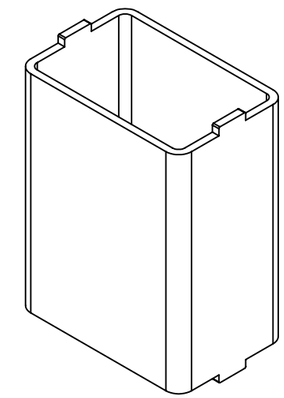

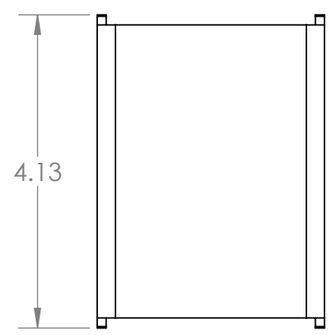

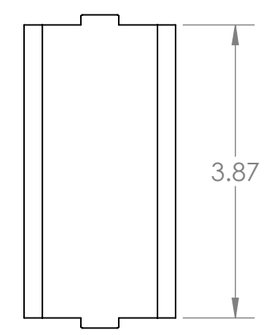

WELD PROJECTS
101 INDUSTRIAL CT, CONROE, TX 77301
PH: 281-238-9652

UNLESS OTHERWISE SPECIFIED
DIMENSIONS ARE IN INCHES
TOLERANCES:
FRACTIONAL ±1/16
ANGULAR: BEND ±1° MACH ±0.5°
DIMENSIONAL TOLERANCE ± 0.015
DO NOT SCALE DRAWING

	NAME	DATE
DRAWN	Noe F	10/15/25
CHECKED		
MFG. APPR.		
Q.A. APPR.		

COMMENTS :

PART # HAYB-052-000
P/N REV : A-1
DWG. VER : 1
SO# :

DESCRIPTION : Hay Bale Trailer - Winch Mount Tube
MATERIAL : 2x3_0.12" ASTM A36 Steel
ROUTING :
CUSTOMER : STD. PRODUCT

PROPRIETARY AND CONFIDENTIAL : THE INFORMATION CONTAINED IN THIS DRAWING IS THE SOLE PROPERTY OF WELD PROJECTS. ANY REPRODUCTION, IN PART OR AS A WHOLE, WITHOUT WRITTEN PERMISSION OF WELD PROJECTS IS PROHIBITED.

SHEET 1 OF 1

REVISIONS			
REV.	DESCRIPTION	DATE	APPROVED

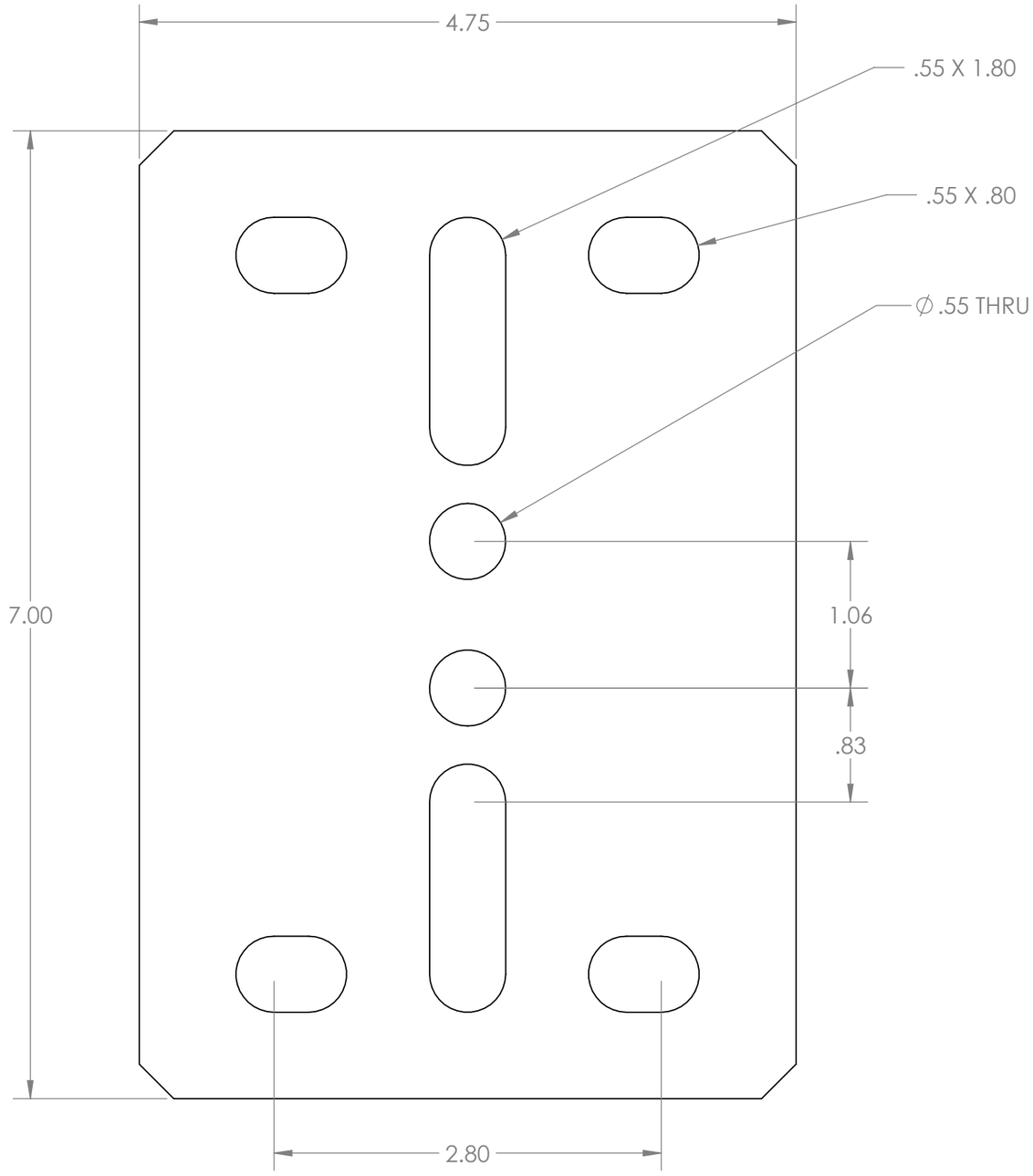

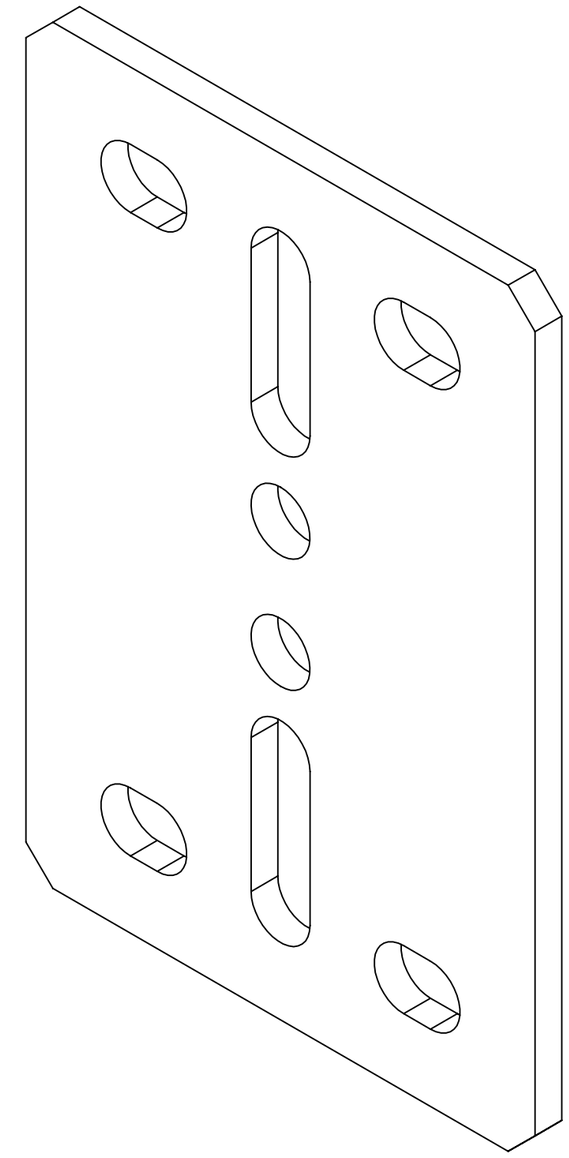

WELD PROJECTS
101 INDUSTRIAL CT, CONROE, TX 77301
PH: 281-238-9652

UNLESS OTHERWISE SPECIFIED
DIMENSIONS ARE IN INCHES
TOLERANCES:
FRACTIONAL ±1/16
ANGULAR: BEND ±1° MACH ±0.5°
DIMENSIONAL TOLERANCE ± 0.015
DO NOT SCALE DRAWING

	NAME	DATE
DRAWN	Noe F	10/15/25
CHECKED		
MFG. APPR.		
Q.A. APPR.		

COMMENTS :

PART # HAYB-052-001
P/N REV : A-1
DWG. VER : 1
SO# :

DESCRIPTION : Hay Bale Trailer - Winch Mount Plate
MATERIAL : 0.25" ASTM A36 Steel
ROUTING :
CUSTOMER : STD. PRODUCT

PROPRIETARY AND CONFIDENTIAL : THE INFORMATION CONTAINED IN THIS DRAWING IS THE SOLE PROPERTY OF WELD PROJECTS. ANY REPRODUCTION, IN PART OR AS A WHOLE, WITHOUT WRITTEN PERMISSION OF WELD PROJECTS IS PROHIBITED.

REVISIONS			
REV.	DESCRIPTION	DATE	APPROVED

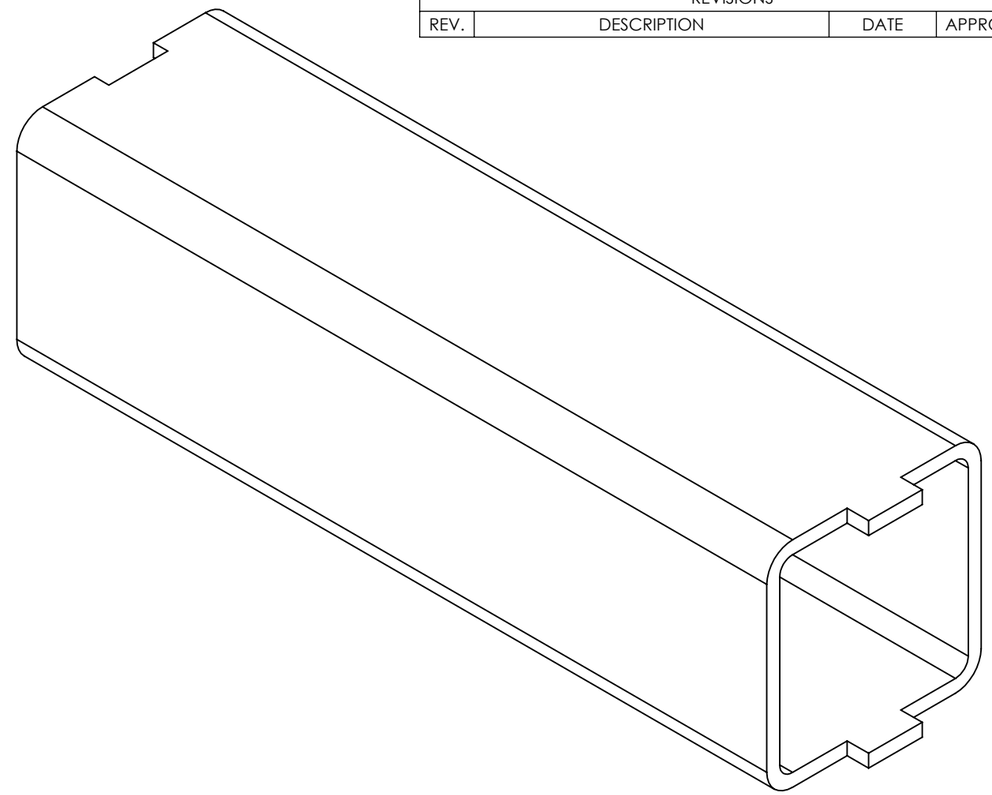

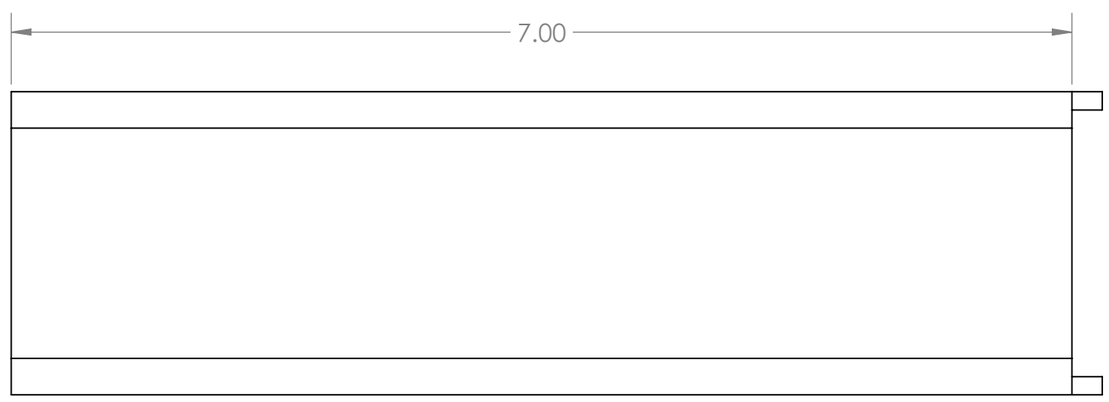

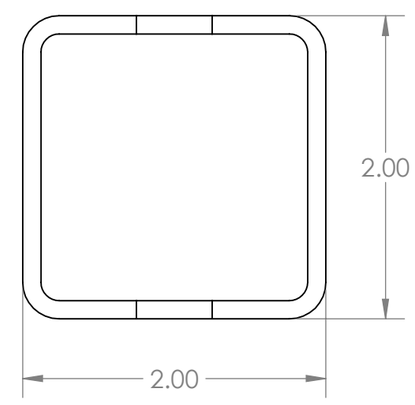

WELD PROJECTS
101 INDUSTRIAL CT, CONROE, TX 77301
PH: 281-238-9652

UNLESS OTHERWISE SPECIFIED
DIMENSIONS ARE IN INCHES
TOLERANCES:
FRACTIONAL ±1/16
ANGULAR: BEND ±1° MACH ±0.5°
DIMENSIONAL TOLERANCE ± 0.015
DO NOT SCALE DRAWING

	NAME	DATE
DRAWN	Noe F	10/15/25
CHECKED		
MFG. APPR.		
Q.A. APPR.		

COMMENTS :

PART # HAYB-053-000
P/N REV : A-1
DWG. VER : 1
SO# :

DESCRIPTION : Hay Bale Trailer - Spindle Sleeve
MATERIAL : 2x2_0.12" ASTM A36 Steel
ROUTING :
CUSTOMER : STD. PRODUCT

PROPRIETARY AND CONFIDENTIAL : THE INFORMATION CONTAINED IN THIS DRAWING IS THE SOLE PROPERTY OF WELD PROJECTS. ANY REPRODUCTION, IN PART OR AS A WHOLE, WITHOUT WRITTEN PERMISSION OF WELD PROJECTS IS PROHIBITED.

REVISIONS			
REV.	DESCRIPTION	DATE	APPROVED

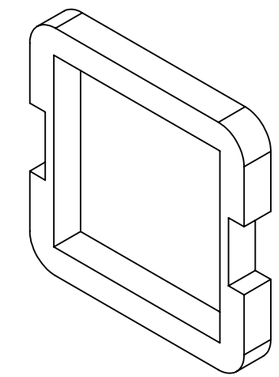

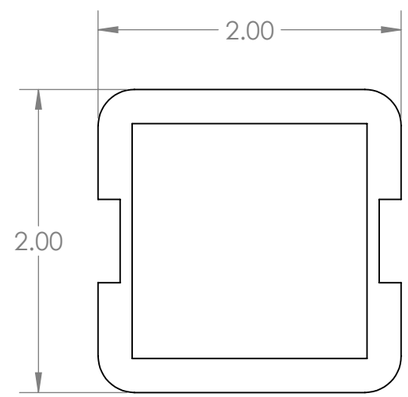

WELD PROJECTS
101 INDUSTRIAL CT, CONROE, TX 77301
PH: 281-238-9652

UNLESS OTHERWISE SPECIFIED
DIMENSIONS ARE IN INCHES
TOLERANCES:
FRACTIONAL ±1/16
ANGULAR: BEND ±1° MACH ±0.5°
DIMENSIONAL TOLERANCE ± 0.015
DO NOT SCALE DRAWING

	NAME	DATE
DRAWN	Noe F	10/15/25
CHECKED		
MFG. APPR.		
Q.A. APPR.		

COMMENTS :

PART # HAYB-054-000
P/N REV : A-1
DWG. VER : 1
SO# :

DESCRIPTION : Hay Bale Trailer - Spindle Adapter Plate
MATERIAL : 0.25" ASTM A36 Steel
ROUTING :
CUSTOMER : STD. PRODUCT

PROPRIETARY AND CONFIDENTIAL : THE INFORMATION CONTAINED IN THIS DRAWING IS THE SOLE PROPERTY OF WELD PROJECTS. ANY REPRODUCTION, IN PART OR AS A WHOLE, WITHOUT WRITTEN PERMISSION OF WELD PROJECTS IS PROHIBITED.

SHEET 1 OF 1

REVISIONS			
REV.	DESCRIPTION	DATE	APPROVED

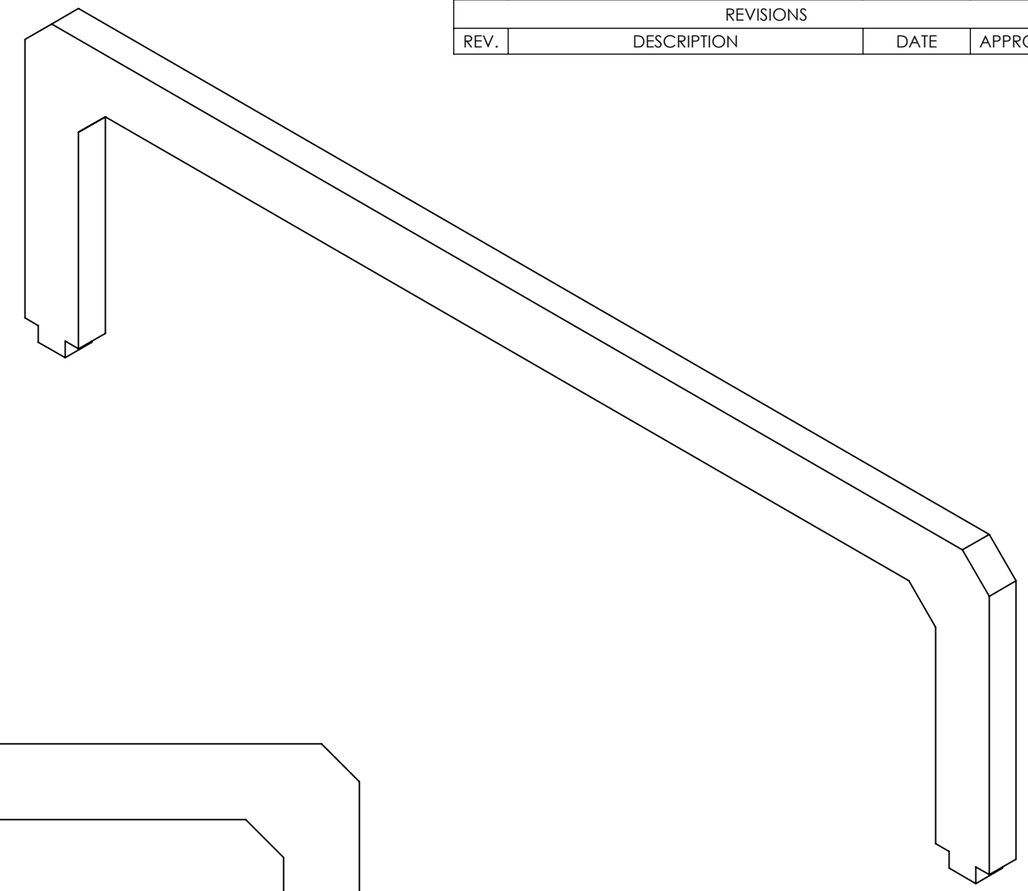

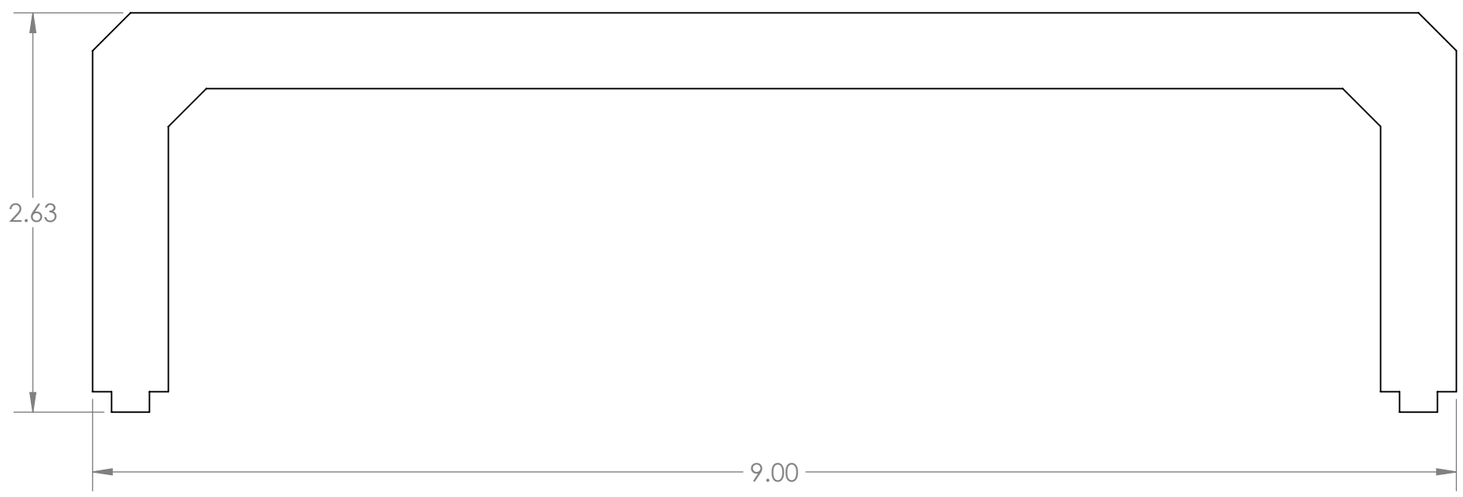

WELD PROJECTS
101 INDUSTRIAL CT, CONROE, TX 77301
PH: 281-238-9652

UNLESS OTHERWISE SPECIFIED
DIMENSIONS ARE IN INCHES
TOLERANCES:
FRACTIONAL ±1/16
ANGULAR: BEND ±1° MACH ±0.5°
DIMENSIONAL TOLERANCE ± 0.015
DO NOT SCALE DRAWING

	NAME	DATE
DRAWN	Noe F	10/15/25
CHECKED		
MFG. APPR.		
Q.A. APPR.		

COMMENTS :

PART # HAYB-055-000
P/N REV : A-1
DWG. VER : 1
SO# :

DESCRIPTION : Hay Bale Trailer - Tongue Handle
MATERIAL : 0.25" ASTM A36 Steel
ROUTING :
CUSTOMER : STD. PRODUCT

PROPRIETARY AND CONFIDENTIAL : THE INFORMATION CONTAINED IN THIS DRAWING IS THE SOLE PROPERTY OF WELD PROJECTS. ANY REPRODUCTION, IN PART OR AS A WHOLE, WITHOUT WRITTEN PERMISSION OF WELD PROJECTS IS PROHIBITED.

REVISIONS			
REV.	DESCRIPTION	DATE	APPROVED

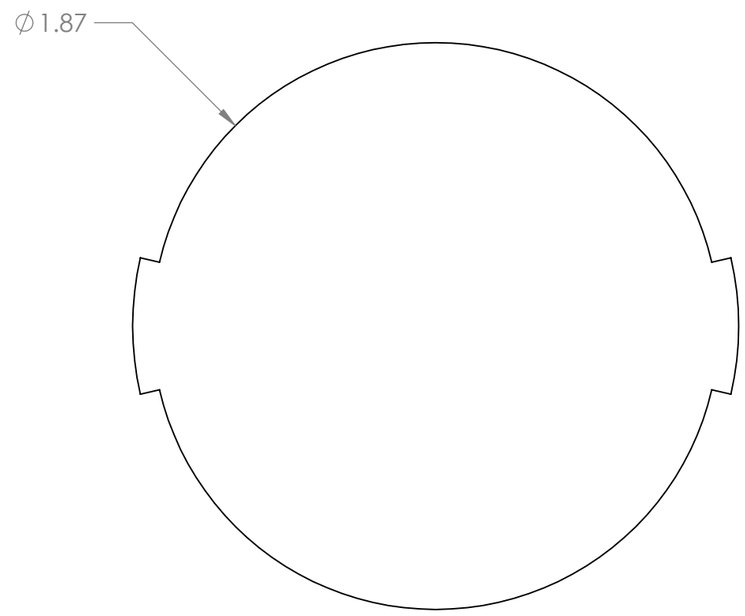

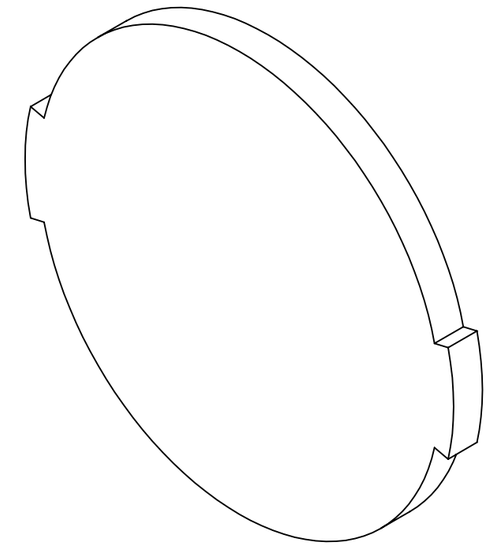

WELD PROJECTS
101 INDUSTRIAL CT, CONROE, TX 77301
PH: 281-238-9652

UNLESS OTHERWISE SPECIFIED
DIMENSIONS ARE IN INCHES
TOLERANCES:
FRACTIONAL ±1/16
ANGULAR: BEND ±1° MACH ±0.5°
DIMENSIONAL TOLERANCE ± 0.015
DO NOT SCALE DRAWING

	NAME	DATE
DRAWN		
CHECKED		
MFG. APPR.		
Q.A. APPR.		

COMMENTS :

PART # HAYB-056-000
P/N REV : A-1
DWG. VER : 1
SO# :

DESCRIPTION : Hay Bale Trailer - Pitchfork Holder Bottom Cap
MATERIAL : 0.135" ASTM A36 Steel
ROUTING :
CUSTOMER : STD. PRODUCT

PROPRIETARY AND CONFIDENTIAL : THE INFORMATION CONTAINED IN THIS DRAWING IS THE SOLE PROPERTY OF WELD PROJECTS. ANY REPRODUCTION, IN PART OR AS A WHOLE, WITHOUT WRITTEN PERMISSION OF WELD PROJECTS IS PROHIBITED.

REVISIONS			
REV.	DESCRIPTION	DATE	APPROVED

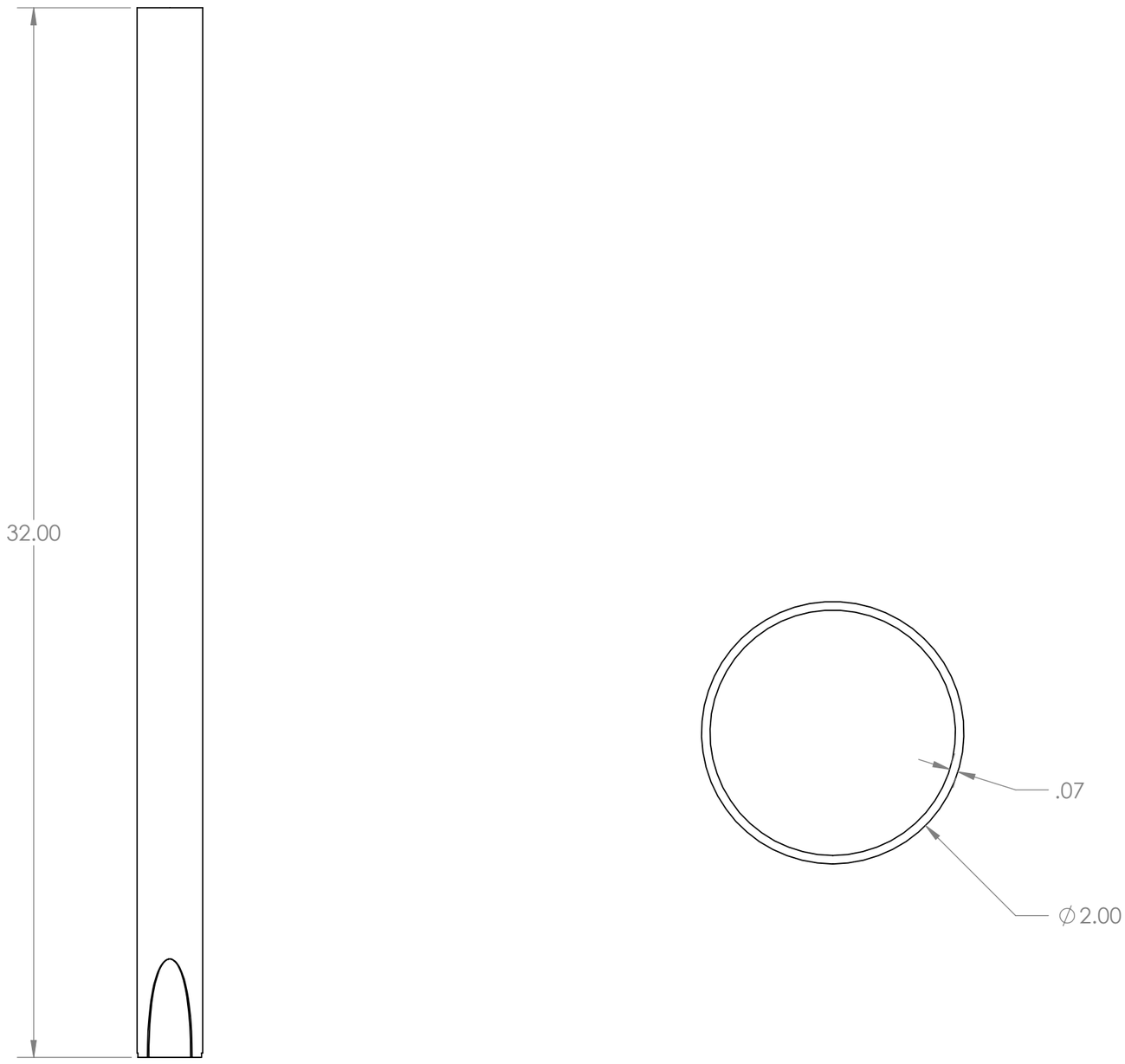

WELD PROJECTS
101 INDUSTRIAL CT, CONROE, TX 77301
PH: 281-238-9652

UNLESS OTHERWISE SPECIFIED
DIMENSIONS ARE IN INCHES
TOLERANCES:
FRACTIONAL ±1/16
ANGULAR: BEND ±1° MACH ±0.5°
DIMENSIONAL TOLERANCE ± 0.015
DO NOT SCALE DRAWING

	NAME	DATE
DRAWN	Noe F	10/15/25
CHECKED		
MFG. APPR.		
Q.A. APPR.		

COMMENTS :

PART # HAYB-057-000
P/N REV : A-1
DWG. VER : 1
SO# :

DESCRIPTION : Hay Bale Trailer - Pitchfork Holder Tube
MATERIAL : Round 2x0.065"" ASTM A36 Steel
ROUTING :
CUSTOMER : STD. PRODUCT

PROPRIETARY AND CONFIDENTIAL : THE INFORMATION CONTAINED IN THIS DRAWING IS THE SOLE PROPERTY OF WELD PROJECTS. ANY REPRODUCTION, IN PART OR AS A WHOLE, WITHOUT WRITTEN PERMISSION OF WELD PROJECTS IS PROHIBITED.

REVISIONS			
REV.	DESCRIPTION	DATE	APPROVED

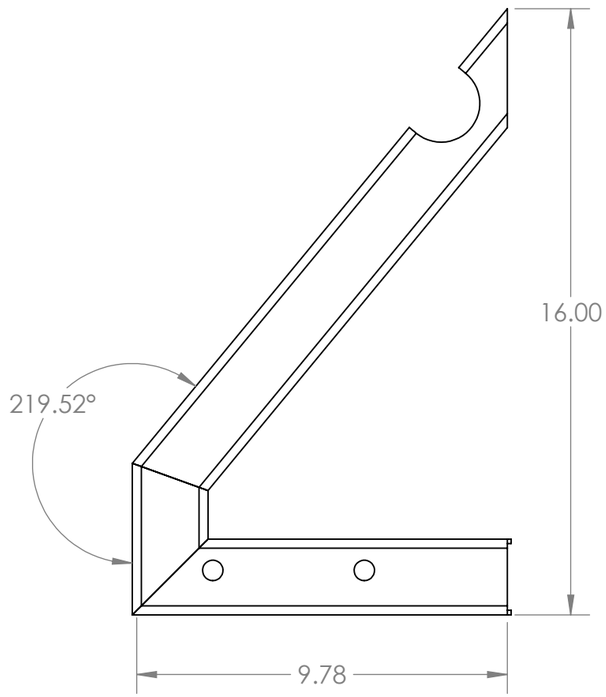

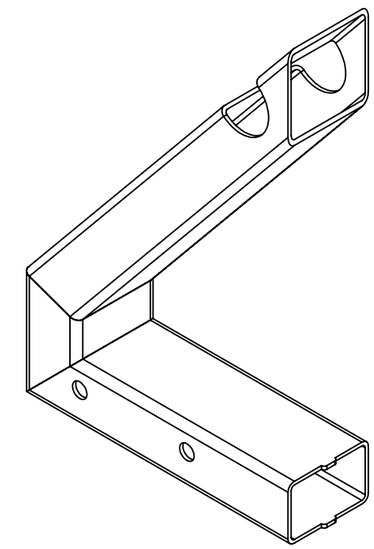

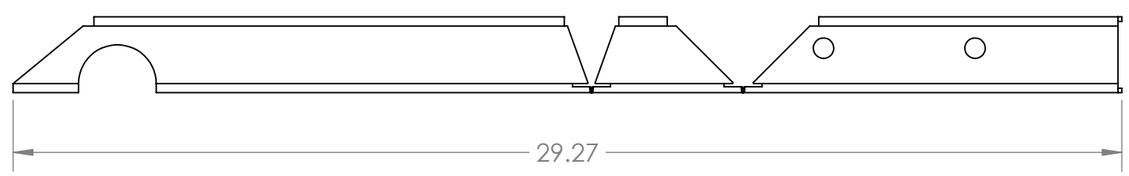

THIS PART NEEDS TO BE BENT BY HAND

WELD PROJECTS
101 INDUSTRIAL CT, CONROE, TX 77301
PH: 281-238-9652

UNLESS OTHERWISE SPECIFIED
DIMENSIONS ARE IN INCHES
TOLERANCES:
FRACTIONAL ±1/16
ANGULAR: BEND ±1° MACH ±0.5°
DIMENSIONAL TOLERANCE ± 0.015
DO NOT SCALE DRAWING

	NAME	DATE
DRAWN	Noe F	10/15/25
CHECKED		
MFG. APPR.		
Q.A. APPR.		

COMMENTS :

PART # HAYB-058-000
P/N REV : A-1
DWG. VER : 1
SO# :

DESCRIPTION : Hay Bale Trailer - Cow Spreader Tube
MATERIAL : 2x3_0.12" ASTM A36 Steel
ROUTING :
CUSTOMER : STD. PRODUCT

PROPRIETARY AND CONFIDENTIAL : THE INFORMATION CONTAINED IN THIS DRAWING IS THE SOLE PROPERTY OF WELD PROJECTS. ANY REPRODUCTION, IN PART OR AS A WHOLE, WITHOUT WRITTEN PERMISSION OF WELD PROJECTS IS PROHIBITED.

REVISIONS			
REV.	DESCRIPTION	DATE	APPROVED

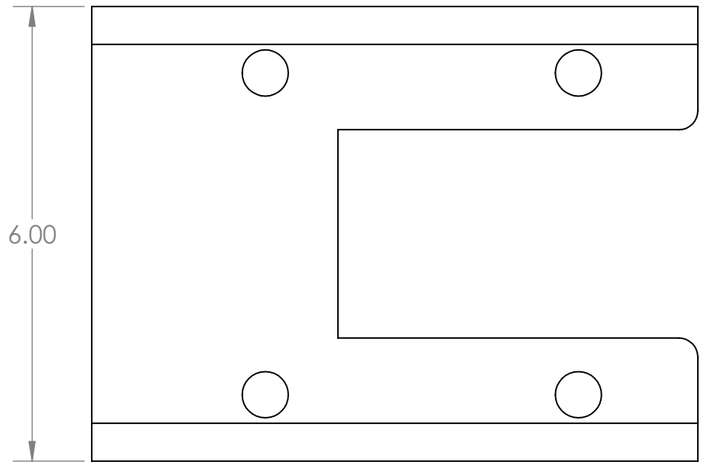

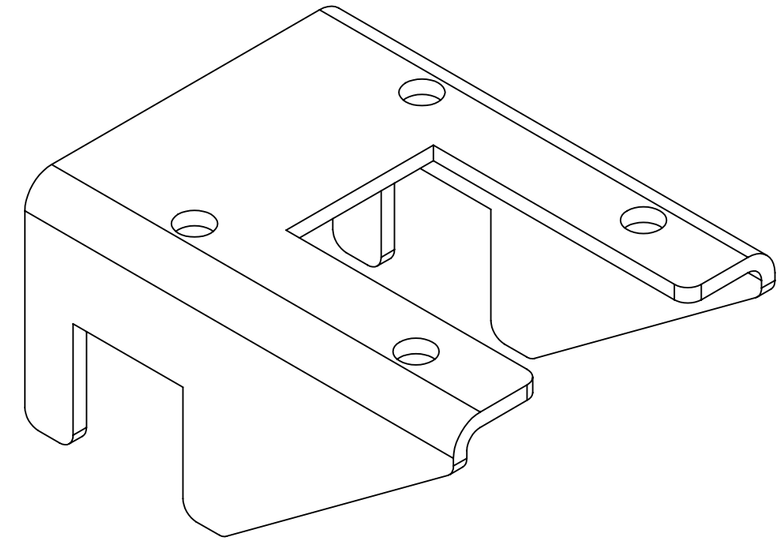

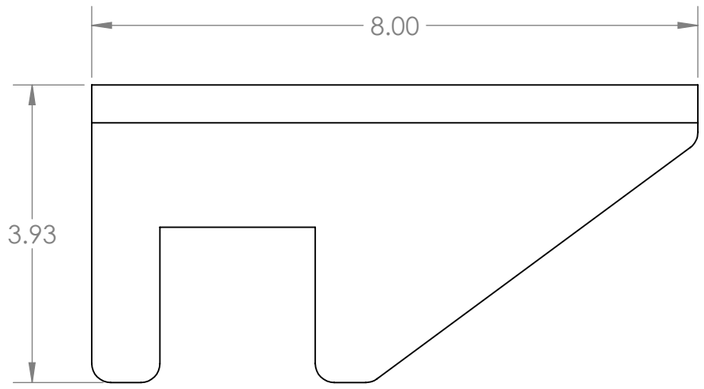

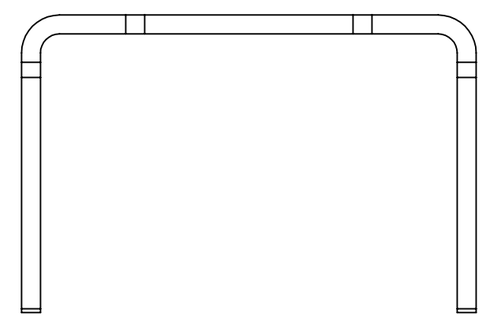

WELD PROJECTS
101 INDUSTRIAL CT, CONROE, TX 77301
PH: 281-238-9652

UNLESS OTHERWISE SPECIFIED
DIMENSIONS ARE IN INCHES
TOLERANCES:
FRACTIONAL ±1/16
ANGULAR: BEND ±1° MACH ±0.5°
DIMENSIONAL TOLERANCE ± 0.015
DO NOT SCALE DRAWING

	NAME	DATE
DRAWN		
CHECKED		
MFG. APPR.		
Q.A. APPR.		

COMMENTS :

PART # HAYB-059-000
P/N REV : A-1
DWG. VER : 1
SO# :

DESCRIPTION : Hay Bale Trailer - Bearing Mount
MATERIAL : 6x6x0.25" ASTM A36 Steel
ROUTING :
CUSTOMER : STD. PRODUCT

PROPRIETARY AND CONFIDENTIAL : THE INFORMATION CONTAINED IN THIS DRAWING IS THE SOLE PROPERTY OF WELD PROJECTS. ANY REPRODUCTION, IN PART OR AS A WHOLE, WITHOUT WRITTEN PERMISSION OF WELD PROJECTS IS PROHIBITED.

REVISIONS			
REV.	DESCRIPTION	DATE	APPROVED

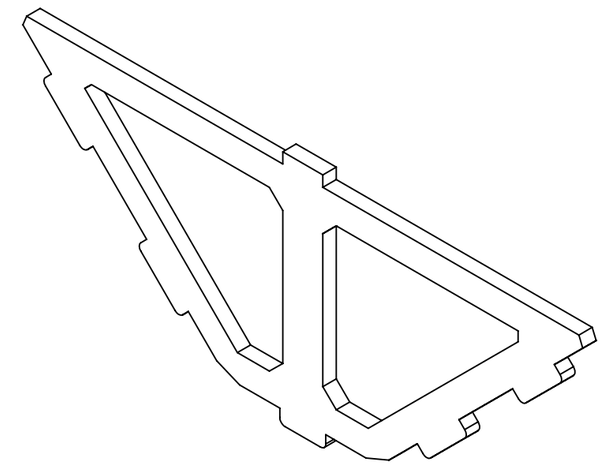

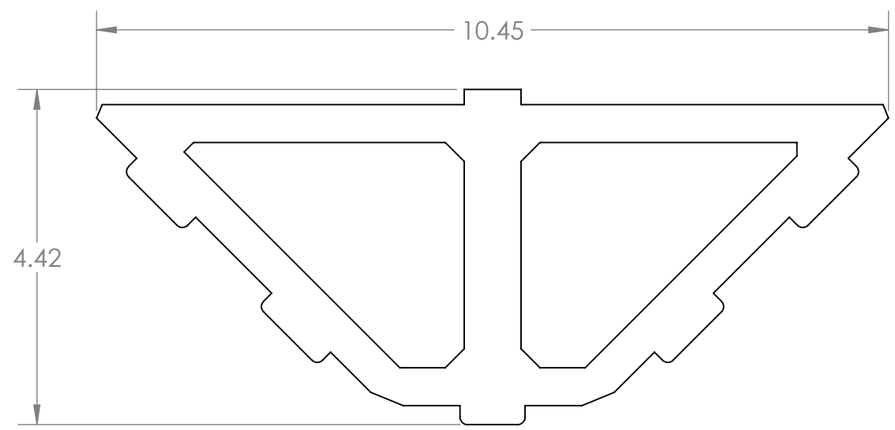

WELD PROJECTS
101 INDUSTRIAL CT, CONROE, TX 77301
PH: 281-238-9652

UNLESS OTHERWISE SPECIFIED
DIMENSIONS ARE IN INCHES
TOLERANCES:
FRACTIONAL ±1/16
ANGULAR: BEND ±1° MACH ±0.5°
DIMENSIONAL TOLERANCE ± 0.015
DO NOT SCALE DRAWING

	NAME	DATE
DRAWN	Noe F	02/19/25
CHECKED		
MFG. APPR.		
Q.A. APPR.		

COMMENTS :

PART # HAYB-060-000
P/N REV : A-1
DWG. VER : 1
SO# :

DESCRIPTION : Hay Bale Trailer - Tongue Leg - Mid Plate
MATERIAL : 0.25" ASTM A36 Steel
ROUTING :
CUSTOMER : STD. PRODUCT

PROPRIETARY AND CONFIDENTIAL : THE INFORMATION CONTAINED IN THIS DRAWING IS THE SOLE PROPERTY OF WELD PROJECTS. ANY REPRODUCTION, IN PART OR AS A WHOLE, WITHOUT WRITTEN PERMISSION OF WELD PROJECTS IS PROHIBITED.

REVISIONS			
REV.	DESCRIPTION	DATE	APPROVED

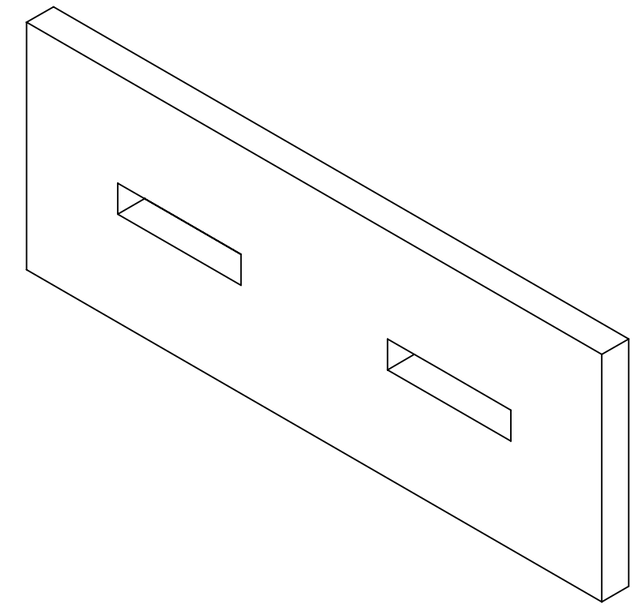

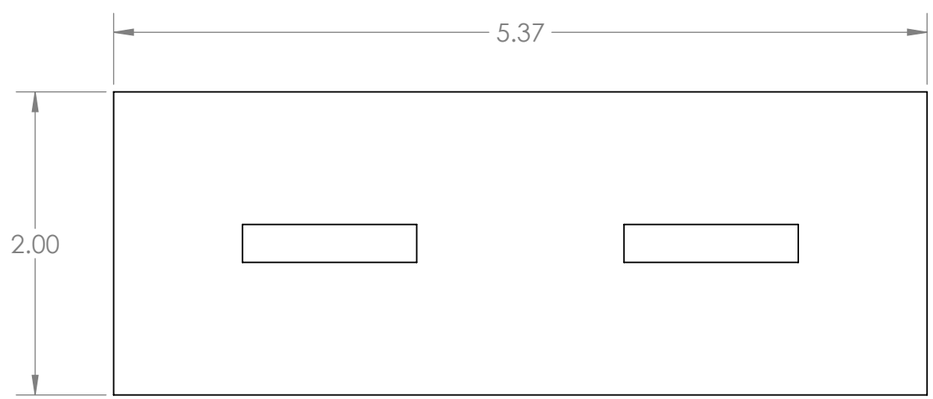

WELD PROJECTS
101 INDUSTRIAL CT, CONROE, TX 77301
PH: 281-238-9652

UNLESS OTHERWISE SPECIFIED
DIMENSIONS ARE IN INCHES
TOLERANCES:
FRACTIONAL ±1/16
ANGULAR: BEND ±1° MACH ±0.5°
DIMENSIONAL TOLERANCE ± 0.015
DO NOT SCALE DRAWING

	NAME	DATE
DRAWN	Noe F	02/19/25
CHECKED		
MFG. APPR.		
Q.A. APPR.		

COMMENTS :

PART # HAYB-060-001
P/N REV : A-1
DWG. VER : 1
SO# :

DESCRIPTION : Hay Bale Trailer - Tongue Leg - Side Plate
MATERIAL : 0.25" ASTM A36 Steel
ROUTING :
CUSTOMER : STD. PRODUCT

PROPRIETARY AND CONFIDENTIAL : THE INFORMATION CONTAINED IN THIS DRAWING IS THE SOLE PROPERTY OF WELD PROJECTS. ANY REPRODUCTION, IN PART OR AS A WHOLE, WITHOUT WRITTEN PERMISSION OF WELD PROJECTS IS PROHIBITED.

REVISIONS			
REV.	DESCRIPTION	DATE	APPROVED

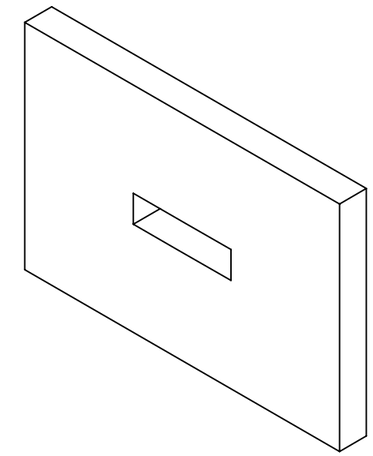

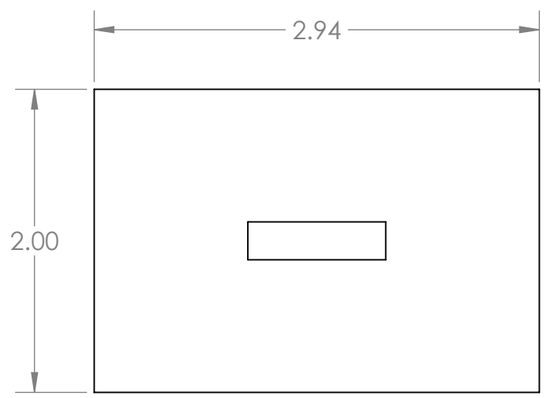

WELD PROJECTS
101 INDUSTRIAL CT, CONROE, TX 77301
PH: 281-238-9652

UNLESS OTHERWISE SPECIFIED
DIMENSIONS ARE IN INCHES
TOLERANCES:
FRACTIONAL ±1/16
ANGULAR: BEND ±1° MACH ±0.5°
DIMENSIONAL TOLERANCE ± 0.015
DO NOT SCALE DRAWING

	NAME	DATE
DRAWN	Noe F	02/19/25
CHECKED		
MFG. APPR.		
Q.A. APPR.		

COMMENTS :

PART # HAYB-060-002
P/N REV : A-1
DWG. VER : 1
SO# :

DESCRIPTION : Hay Bale Trailer - Tongue Leg - Bot Plate
MATERIAL : 0.25" ASTM A36 Steel
ROUTING :
CUSTOMER : STD. PRODUCT

PROPRIETARY AND CONFIDENTIAL : THE INFORMATION CONTAINED IN THIS DRAWING IS THE SOLE PROPERTY OF WELD PROJECTS. ANY REPRODUCTION, IN PART OR AS A WHOLE, WITHOUT WRITTEN PERMISSION OF WELD PROJECTS IS PROHIBITED.

REVISIONS			
REV.	DESCRIPTION	DATE	APPROVED

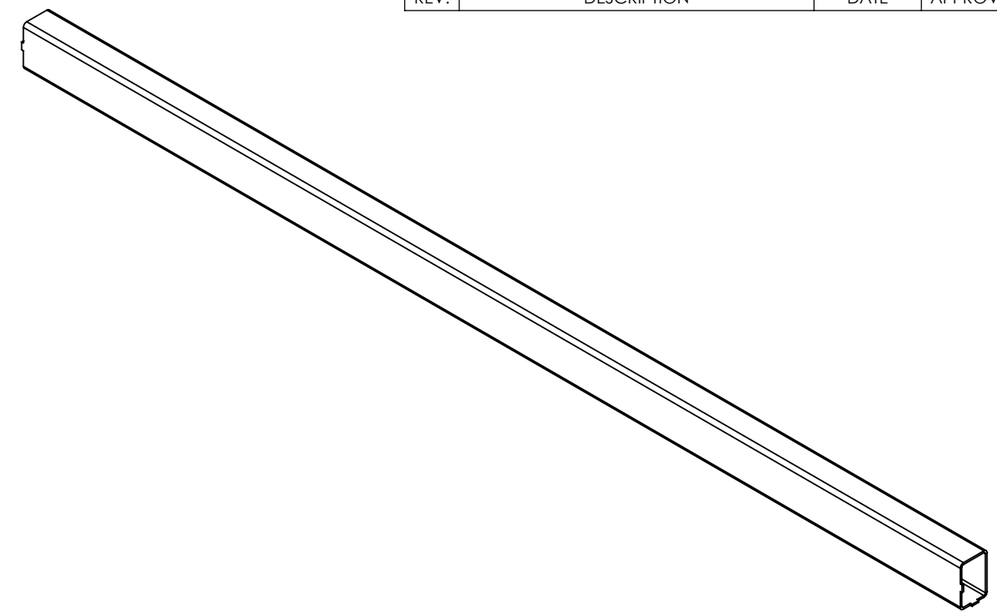

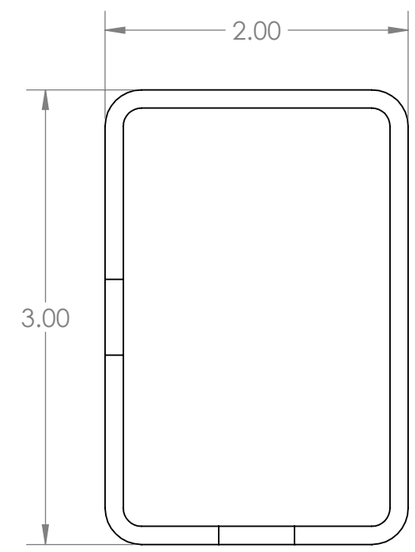

WELD PROJECTS
101 INDUSTRIAL CT, CONROE, TX 77301
PH: 281-238-9652

UNLESS OTHERWISE SPECIFIED
DIMENSIONS ARE IN INCHES
TOLERANCES:
FRACTIONAL ±1/16
ANGULAR: BEND ±1° MACH ±0.5°
DIMENSIONAL TOLERANCE ± 0.015
DO NOT SCALE DRAWING

	NAME	DATE
DRAWN	Noe F	10/15/25
CHECKED		
MFG. APPR.		
Q.A. APPR.		

COMMENTS :

PART # HAYB-061-000
P/N REV : A-1
DWG. VER : 1
SO# :

DESCRIPTION : Hay Bale Trailer - D-Ring CrossBar
MATERIAL : 2x3_0.12" ASTM A36 Steel
ROUTING :
CUSTOMER : STD. PRODUCT

PROPRIETARY AND CONFIDENTIAL : THE INFORMATION CONTAINED IN THIS DRAWING IS THE SOLE PROPERTY OF WELD PROJECTS. ANY REPRODUCTION, IN PART OR AS A WHOLE, WITHOUT WRITTEN PERMISSION OF WELD PROJECTS IS PROHIBITED.

REVISIONS			
REV.	DESCRIPTION	DATE	APPROVED

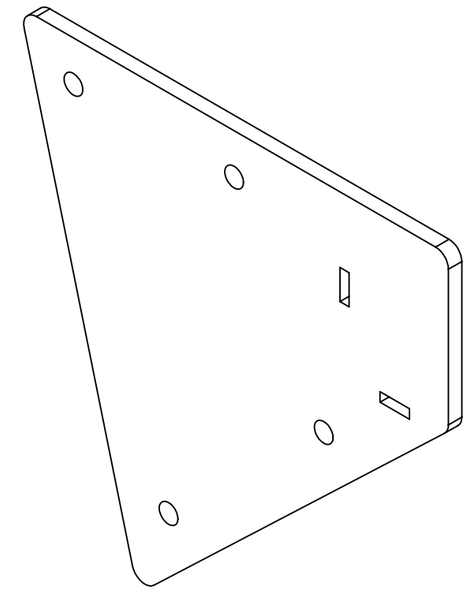

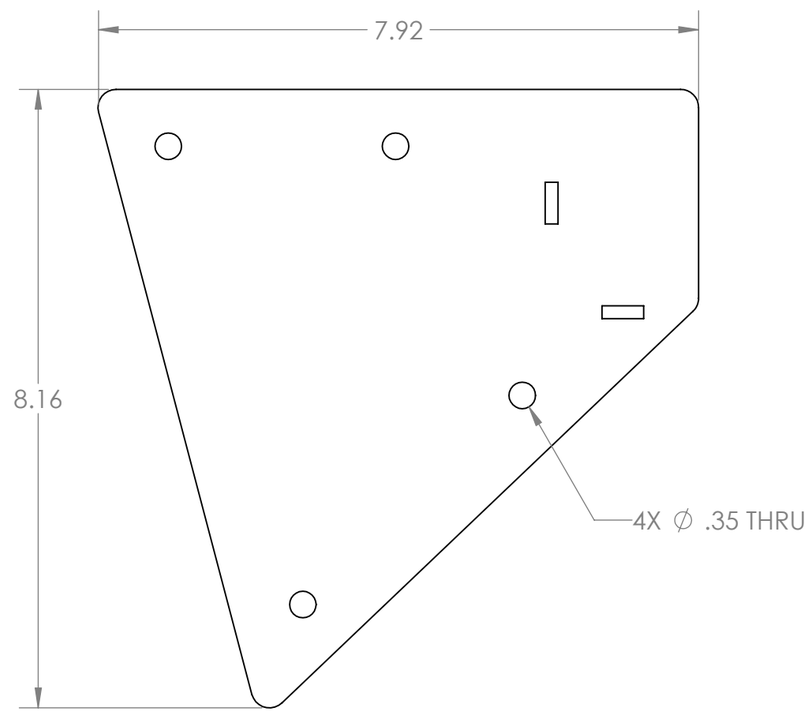

WELD PROJECTS
101 INDUSTRIAL CT, CONROE, TX 77301
PH: 281-238-9652

UNLESS OTHERWISE SPECIFIED
DIMENSIONS ARE IN INCHES
TOLERANCES:
FRACTIONAL ±1/16
ANGULAR: BEND ±1° MACH ±0.5°
DIMENSIONAL TOLERANCE ± 0.015
DO NOT SCALE DRAWING

	NAME	DATE
DRAWN	Noe F	10/15/25
CHECKED		
MFG. APPR.		
Q.A. APPR.		

COMMENTS :

PART # HAYB-062-000
P/N REV : A-1
DWG. VER : 1
SO# :

DESCRIPTION : Hay Bale Trailer - CrossBar Gusset
MATERIAL : 0.25" ASTM A36 Steel
ROUTING :
CUSTOMER : STD. PRODUCT

PROPRIETARY AND CONFIDENTIAL : THE INFORMATION CONTAINED IN THIS DRAWING IS THE SOLE PROPERTY OF WELD PROJECTS. ANY REPRODUCTION, IN PART OR AS A WHOLE, WITHOUT WRITTEN PERMISSION OF WELD PROJECTS IS PROHIBITED.

REVISIONS			
REV.	DESCRIPTION	DATE	APPROVED

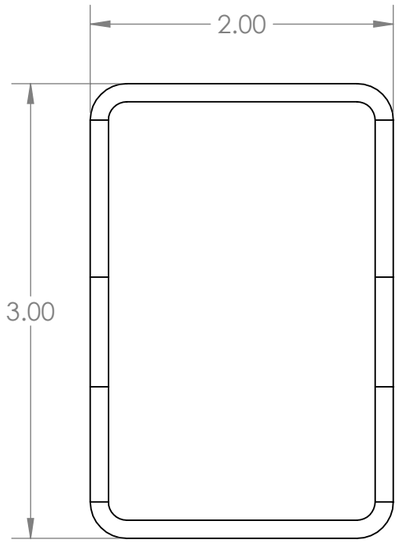

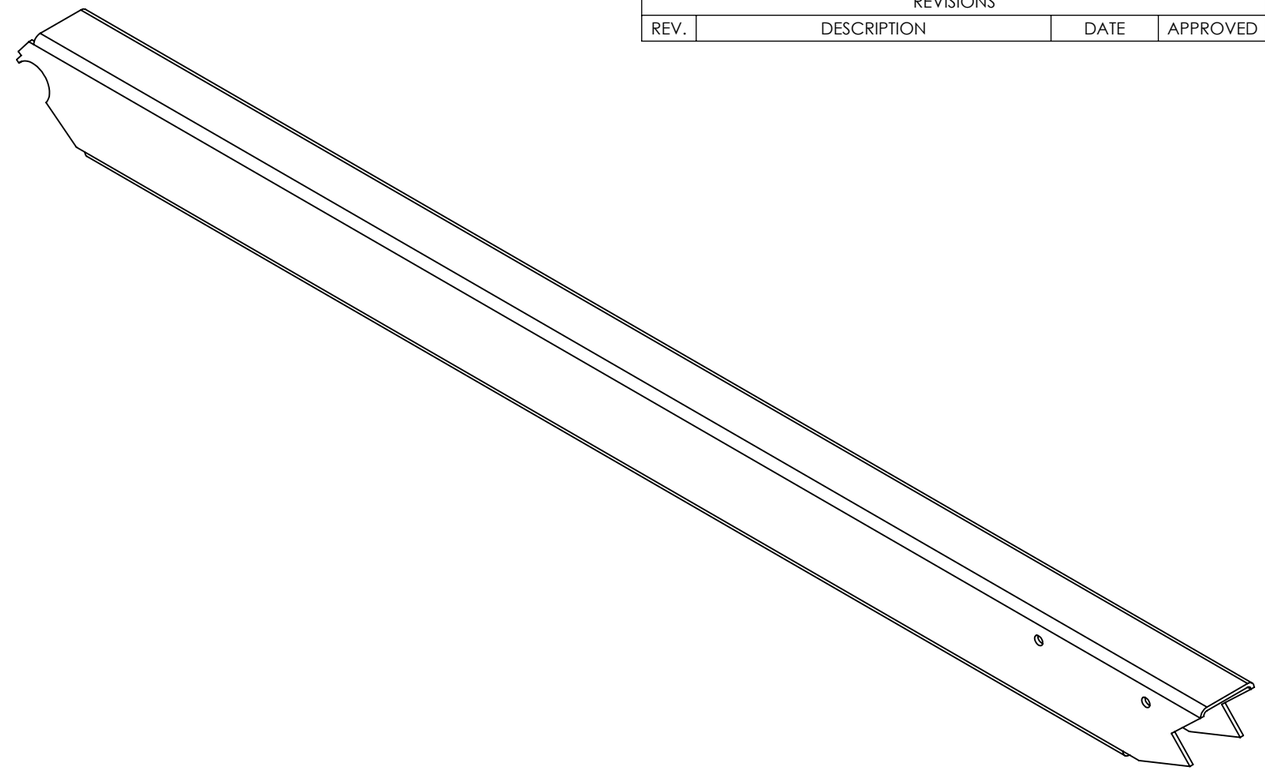

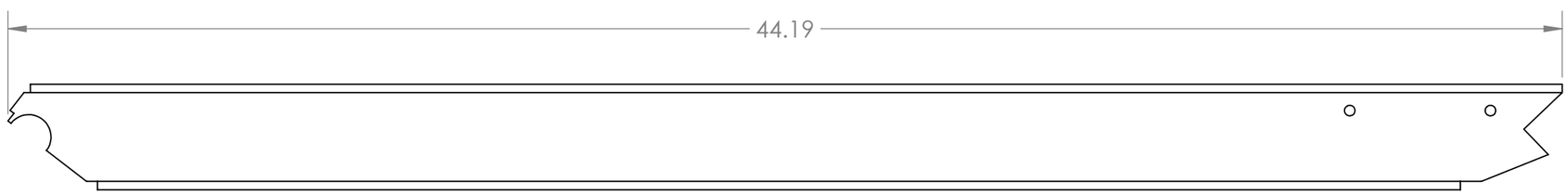

WELD PROJECTS
101 INDUSTRIAL CT, CONROE, TX 77301
PH: 281-238-9652

UNLESS OTHERWISE SPECIFIED
DIMENSIONS ARE IN INCHES
TOLERANCES:
FRACTIONAL ±1/16
ANGULAR: BEND ±1° MACH ±0.5°
DIMENSIONAL TOLERANCE ± 0.015
DO NOT SCALE DRAWING

	NAME	DATE
DRAWN	Noe F	02/03/25
CHECKED		
MFG. APPR.		
Q.A. APPR.		

COMMENTS :

PART # HAYB-063-000
P/N REV : A-1
DWG. VER : 1
SO# :

DESCRIPTION : Hay Bale Trailer - Scissor - Front
MATERIAL : 2x3_0.075" ASTM A36 Steel
ROUTING :
CUSTOMER : STD. PRODUCT

PROPRIETARY AND CONFIDENTIAL : THE INFORMATION CONTAINED IN THIS DRAWING IS THE SOLE PROPERTY OF WELD PROJECTS. ANY REPRODUCTION, IN PART OR AS A WHOLE, WITHOUT WRITTEN PERMISSION OF WELD PROJECTS IS PROHIBITED.

REVISIONS			
REV.	DESCRIPTION	DATE	APPROVED

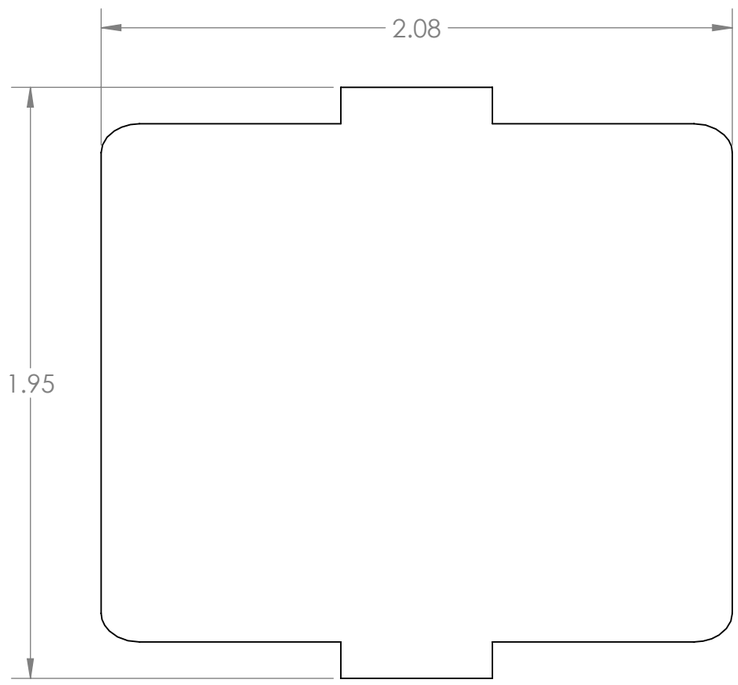

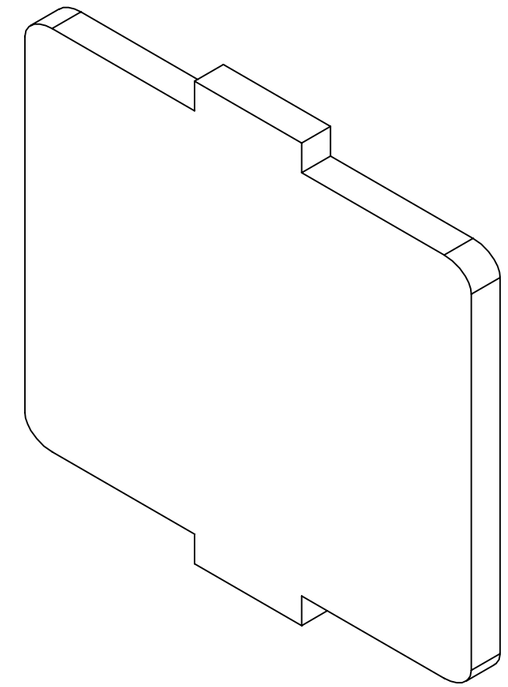

WELD PROJECTS
101 INDUSTRIAL CT, CONROE, TX 77301
PH: 281-238-9652

UNLESS OTHERWISE SPECIFIED
DIMENSIONS ARE IN INCHES
TOLERANCES:
FRACTIONAL ±1/16
ANGULAR: BEND ±1° MACH ±0.5°
DIMENSIONAL TOLERANCE ± 0.015
DO NOT SCALE DRAWING

	NAME	DATE
DRAWN	Noe F	02/03/25
CHECKED		
MFG. APPR.		
Q.A. APPR.		

COMMENTS :

PART # HAYB-063-001
P/N REV : A-1
DWG. VER : 1
SO# :

DESCRIPTION : Hay Bale Trailer - Scissor - Tube Cap
MATERIAL : 2x3_0.075" ASTM A36 Steel
ROUTING :
CUSTOMER : STD. PRODUCT

PROPRIETARY AND CONFIDENTIAL : THE INFORMATION CONTAINED IN THIS DRAWING IS THE SOLE PROPERTY OF WELD PROJECTS. ANY REPRODUCTION, IN PART OR AS A WHOLE, WITHOUT WRITTEN PERMISSION OF WELD PROJECTS IS PROHIBITED.

REVISIONS			
REV.	DESCRIPTION	DATE	APPROVED

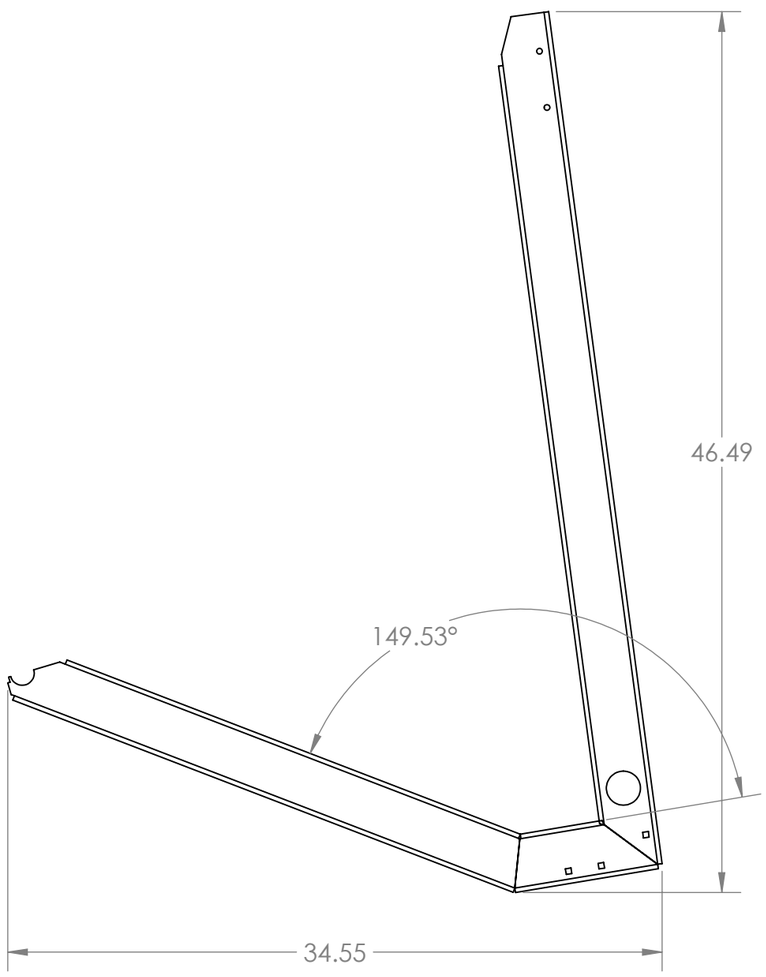

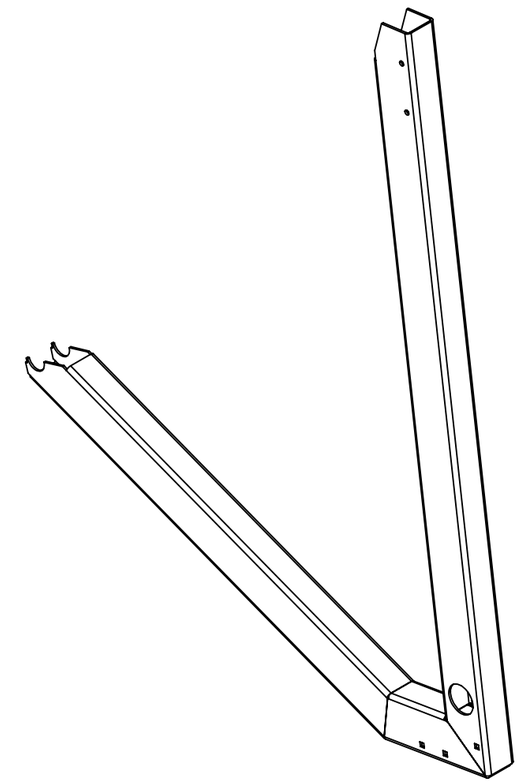

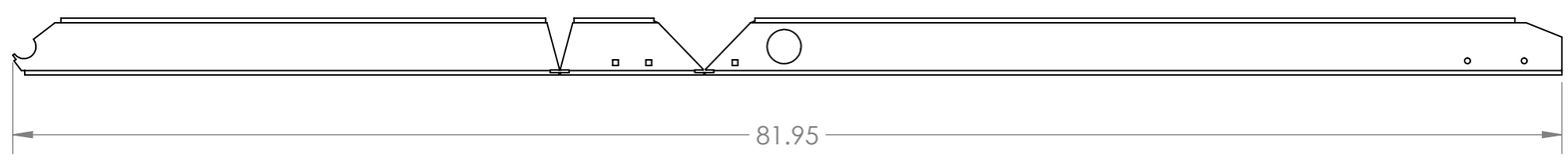

PART NEEDS TO BE BENT BY HAND

WELD PROJECTS
101 INDUSTRIAL CT, CONROE, TX 77301
PH: 281-238-9652

UNLESS OTHERWISE SPECIFIED
DIMENSIONS ARE IN INCHES
TOLERANCES:
FRACTIONAL ±1/16
ANGULAR: BEND ±1° MACH ±0.5°
DIMENSIONAL TOLERANCE ± 0.015
DO NOT SCALE DRAWING

	NAME	DATE
DRAWN	Noe F	02/03/25
CHECKED		
MFG. APPR.		
Q.A. APPR.		

COMMENTS :

PART # HAYB-063-002
P/N REV : A-1
DWG. VER : 1
SO# :

DESCRIPTION : Hay Bale Trailer - Scissor - Drag
MATERIAL : 2x3_0.075" ASTM A36 Steel
ROUTING :
CUSTOMER : STD. PRODUCT

PROPRIETARY AND CONFIDENTIAL : THE INFORMATION CONTAINED IN THIS DRAWING IS THE SOLE PROPERTY OF WELD PROJECTS. ANY REPRODUCTION, IN PART OR AS A WHOLE, WITHOUT WRITTEN PERMISSION OF WELD PROJECTS IS PROHIBITED.

REVISIONS			
REV.	DESCRIPTION	DATE	APPROVED

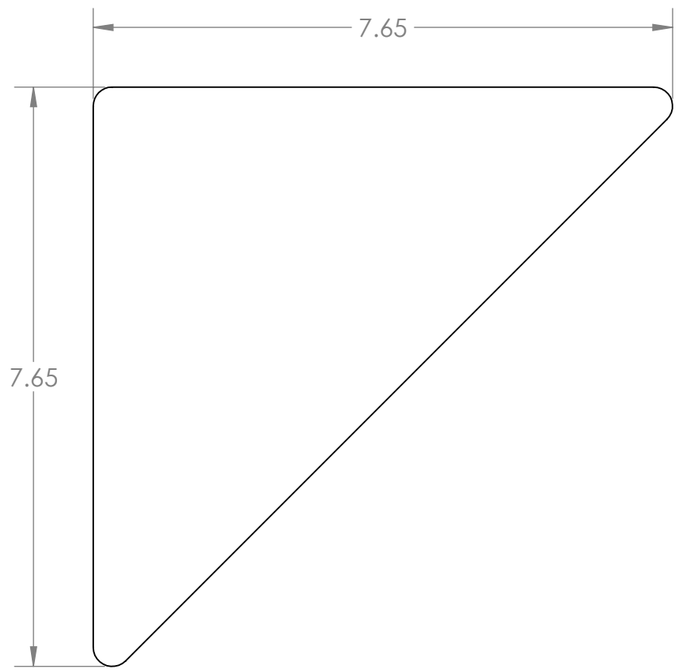

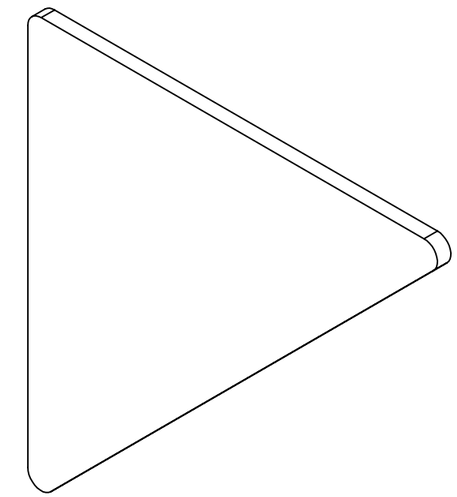

WELD PROJECTS
101 INDUSTRIAL CT, CONROE, TX 77301
PH: 281-238-9652

UNLESS OTHERWISE SPECIFIED
DIMENSIONS ARE IN INCHES
TOLERANCES:
FRACTIONAL ±1/16
ANGULAR: BEND ±1° MACH ±0.5°
DIMENSIONAL TOLERANCE ± 0.015
DO NOT SCALE DRAWING

	NAME	DATE
DRAWN	Noe F	10/10/25
CHECKED		
MFG. APPR.		
Q.A. APPR.		

COMMENTS :

PART # HAYB-064-000
P/N REV : A-1
DWG. VER : 1
SO# :

DESCRIPTION : Hay Bale Trailer - Gusset 8in
MATERIAL : 0.25" ASTM A36 Steel
ROUTING :
CUSTOMER : STD. PRODUCT

PROPRIETARY AND CONFIDENTIAL : THE INFORMATION CONTAINED IN THIS DRAWING IS THE SOLE PROPERTY OF WELD PROJECTS. ANY REPRODUCTION, IN PART OR AS A WHOLE, WITHOUT WRITTEN PERMISSION OF WELD PROJECTS IS PROHIBITED.

REVISIONS			
REV.	DESCRIPTION	DATE	APPROVED

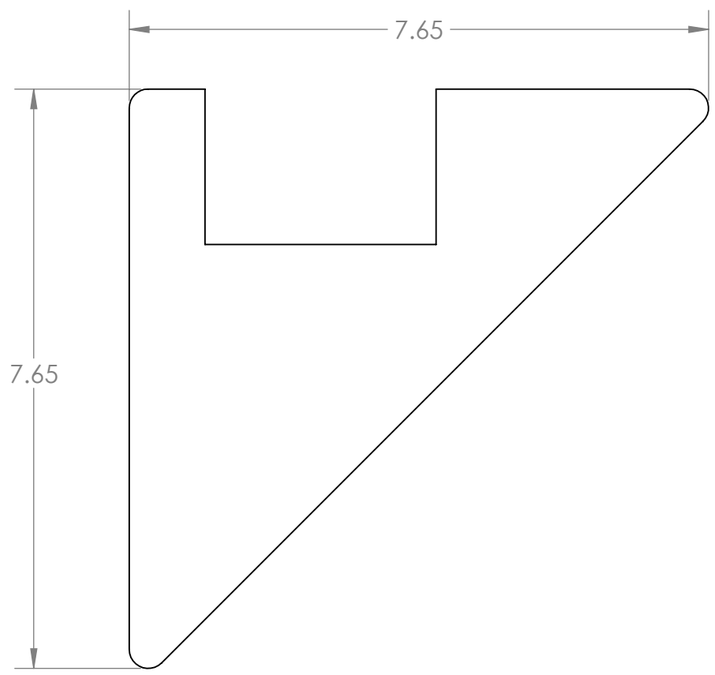

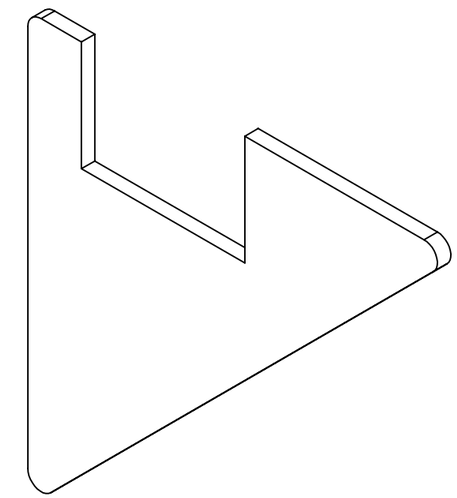

WELD PROJECTS
101 INDUSTRIAL CT, CONROE, TX 77301
PH: 281-238-9652

UNLESS OTHERWISE SPECIFIED
DIMENSIONS ARE IN INCHES
TOLERANCES:
FRACTIONAL ±1/16
ANGULAR: BEND ±1° MACH ±0.5°
DIMENSIONAL TOLERANCE ± 0.015
DO NOT SCALE DRAWING

	NAME	DATE
DRAWN	Noe F	10/10/25
CHECKED		
MFG. APPR.		
Q.A. APPR.		

COMMENTS :

PART # HAYB-064-001
P/N REV : A-1
DWG. VER : 1
SO# :

DESCRIPTION : Hay Bale Trailer - Gusset 8in - Cutout
MATERIAL : 0.25" ASTM A36 Steel
ROUTING :
CUSTOMER : STD. PRODUCT

PROPRIETARY AND CONFIDENTIAL : THE INFORMATION CONTAINED IN THIS DRAWING IS THE SOLE PROPERTY OF WELD PROJECTS. ANY REPRODUCTION, IN PART OR AS A WHOLE, WITHOUT WRITTEN PERMISSION OF WELD PROJECTS IS PROHIBITED.

REVISIONS			
REV.	DESCRIPTION	DATE	APPROVED

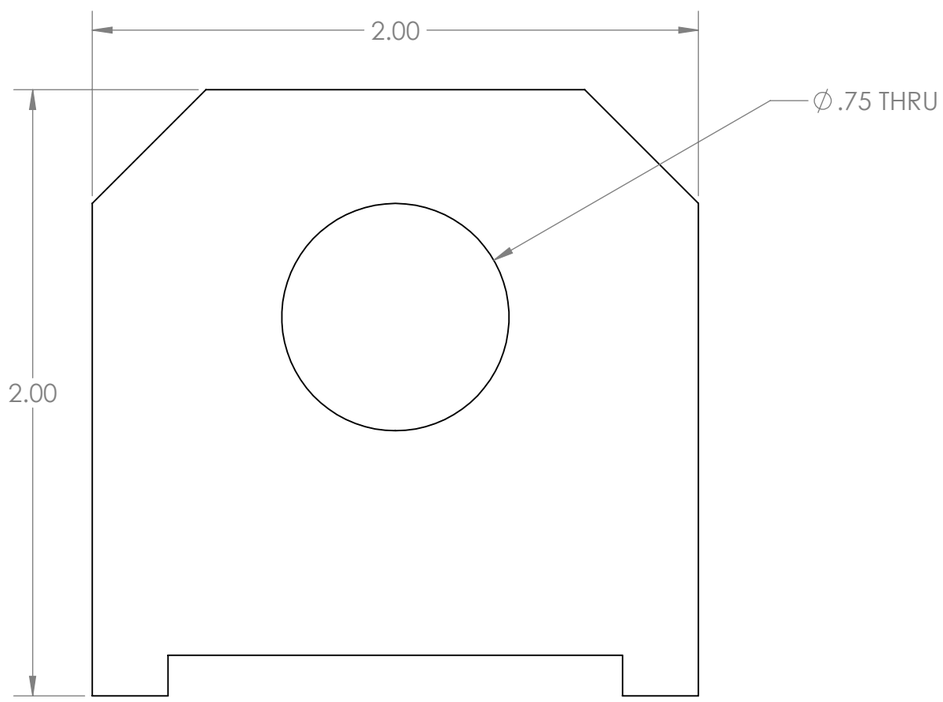

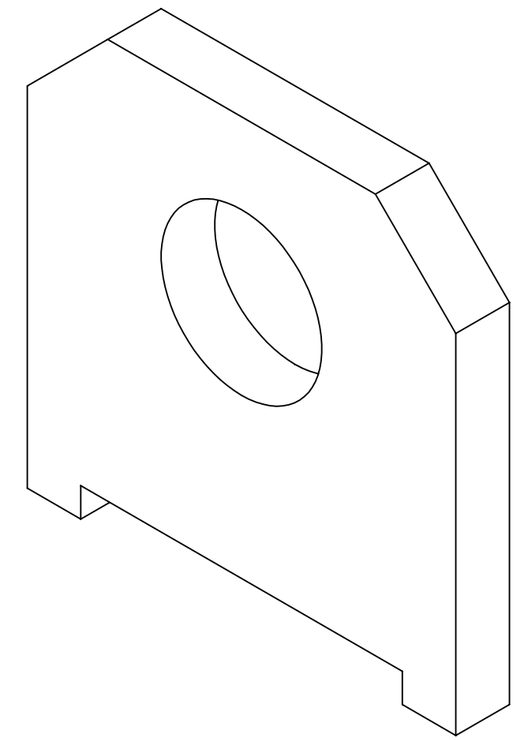

WELD PROJECTS
101 INDUSTRIAL CT, CONROE, TX 77301
PH: 281-238-9652

UNLESS OTHERWISE SPECIFIED
DIMENSIONS ARE IN INCHES
TOLERANCES:
FRACTIONAL ±1/16
ANGULAR: BEND ±1° MACH ±0.5°
DIMENSIONAL TOLERANCE ± 0.015
DO NOT SCALE DRAWING

	NAME	DATE
DRAWN	Noe F	10/15/25
CHECKED		
MFG. APPR.		
Q.A. APPR.		

COMMENTS :

PART # HAYB-065-000
P/N REV : A-1
DWG. VER : 1
SO# :

DESCRIPTION : Hay Bale Trailer - Chain Holder
MATERIAL : 0.25" ASTM A36 Steel
ROUTING :
CUSTOMER : STD. PRODUCT

PROPRIETARY AND CONFIDENTIAL : THE INFORMATION CONTAINED IN THIS DRAWING IS THE SOLE PROPERTY OF WELD PROJECTS. ANY REPRODUCTION, IN PART OR AS A WHOLE, WITHOUT WRITTEN PERMISSION OF WELD PROJECTS IS PROHIBITED.

REVISIONS			
REV.	DESCRIPTION	DATE	APPROVED

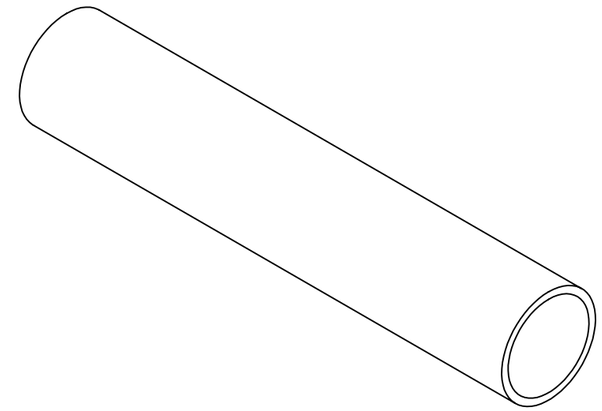

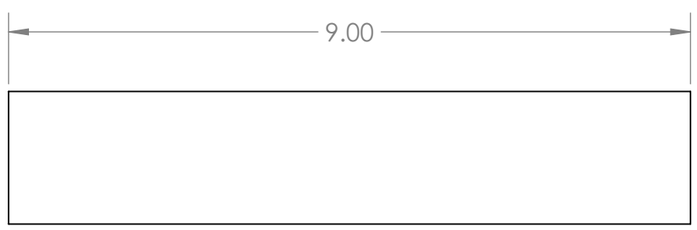

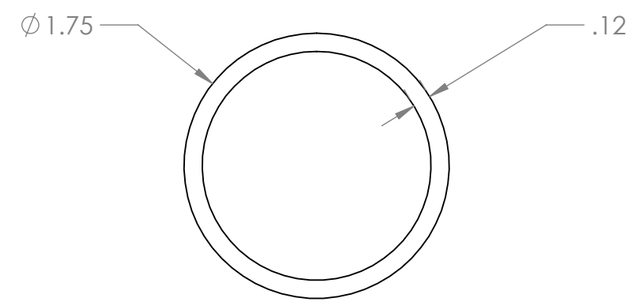

WELD PROJECTS
101 INDUSTRIAL CT, CONROE, TX 77301
PH: 281-238-9652

UNLESS OTHERWISE SPECIFIED
DIMENSIONS ARE IN INCHES
TOLERANCES:
FRACTIONAL ±1/16
ANGULAR: BEND ±1° MACH ±0.5°
DIMENSIONAL TOLERANCE ± 0.015
DO NOT SCALE DRAWING

	NAME	DATE
DRAWN	Noe F	10/15/25
CHECKED		
MFG. APPR.		
Q.A. APPR.		

COMMENTS :

PART # HAYB-066-000
P/N REV : A-1
DWG. VER : 1
SO# :

DESCRIPTION : Hay Bale Trailer - Skewer Sleeve
MATERIAL : DOM 1.75X0.12" ASTM A36 Steel
ROUTING :
CUSTOMER : STD. PRODUCT

PROPRIETARY AND CONFIDENTIAL : THE INFORMATION CONTAINED IN THIS DRAWING IS THE SOLE PROPERTY OF WELD PROJECTS. ANY REPRODUCTION, IN PART OR AS A WHOLE, WITHOUT WRITTEN PERMISSION OF WELD PROJECTS IS PROHIBITED.

REVISIONS			
REV.	DESCRIPTION	DATE	APPROVED

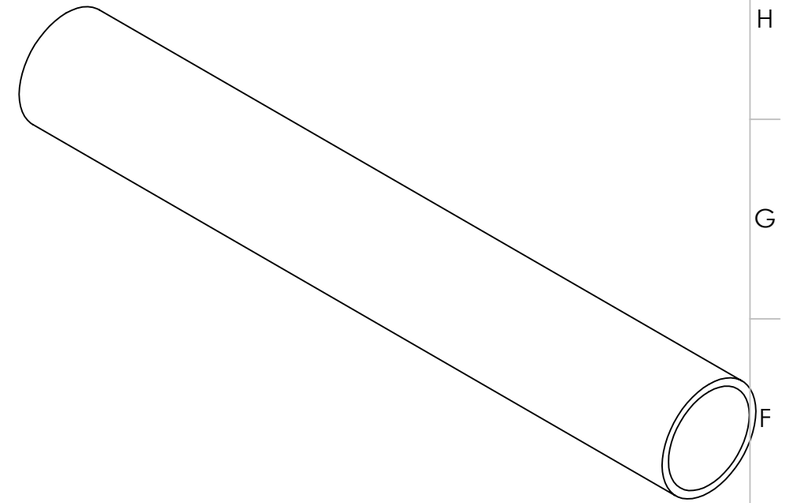

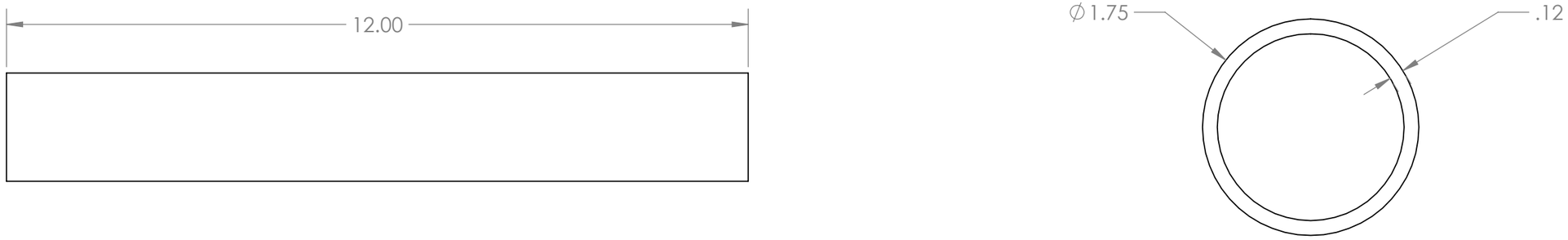

WELD PROJECTS
101 INDUSTRIAL CT, CONROE, TX 77301
PH: 281-238-9652

UNLESS OTHERWISE SPECIFIED
DIMENSIONS ARE IN INCHES
TOLERANCES:
FRACTIONAL ±1/16
ANGULAR: BEND ±1° MACH ±0.5°
DIMENSIONAL TOLERANCE ± 0.015
DO NOT SCALE DRAWING

	NAME	DATE
DRAWN	Noe F	10/15/25
CHECKED		
MFG. APPR.		
Q.A. APPR.		

COMMENTS :

PART # HAYB-066-001
P/N REV : A-1
DWG. VER : 1
SO# :

DESCRIPTION : Hay Bale Trailer - Skewer Sleeve - Alignment Tool
MATERIAL : DOM 1.75X0.12" ASTM A36 Steel
ROUTING :
CUSTOMER : STD. PRODUCT

PROPRIETARY AND CONFIDENTIAL : THE INFORMATION CONTAINED IN THIS DRAWING IS THE SOLE PROPERTY OF WELD PROJECTS. ANY REPRODUCTION, IN PART OR AS A WHOLE, WITHOUT WRITTEN PERMISSION OF WELD PROJECTS IS PROHIBITED.

REVISIONS			
REV.	DESCRIPTION	DATE	APPROVED

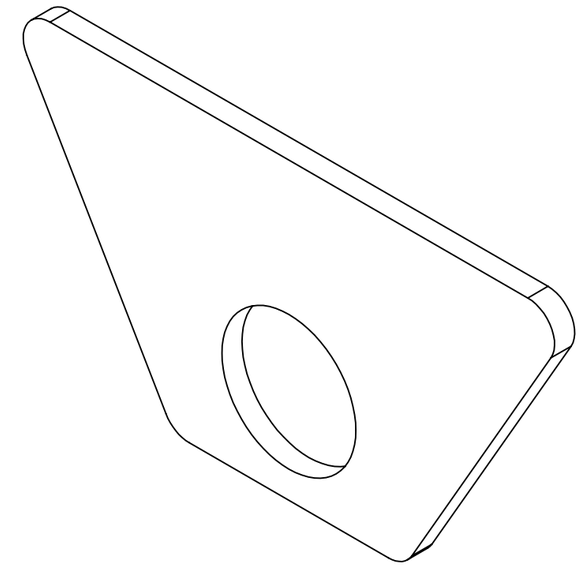

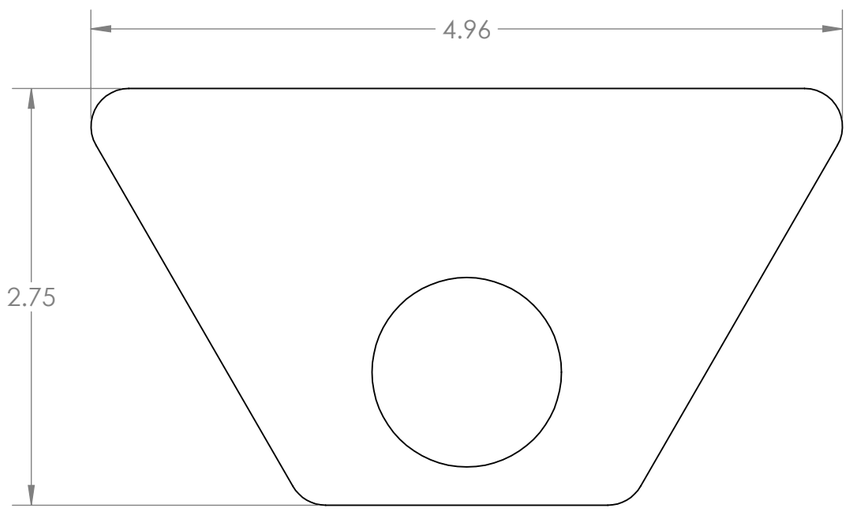

WELD PROJECTS
101 INDUSTRIAL CT, CONROE, TX 77301
PH: 281-238-9652

UNLESS OTHERWISE SPECIFIED
DIMENSIONS ARE IN INCHES
TOLERANCES:
FRACTIONAL ±1/16
ANGULAR: BEND ±1° MACH ±0.5°
DIMENSIONAL TOLERANCE ± 0.015
DO NOT SCALE DRAWING

	NAME	DATE
DRAWN	Noe F	10/15/25
CHECKED		
MFG. APPR.		
Q.A. APPR.		

COMMENTS :

PART # HAYB-067-000
P/N REV : A-1
DWG. VER : 1
SO# :

DESCRIPTION : Hay Bale Trailer - Scissor Reinforcement
MATERIAL : 0.25" ASTM A36 Steel
ROUTING :
CUSTOMER : STD. PRODUCT

PROPRIETARY AND CONFIDENTIAL : THE INFORMATION CONTAINED IN THIS DRAWING IS THE SOLE PROPERTY OF WELD PROJECTS. ANY REPRODUCTION, IN PART OR AS A WHOLE, WITHOUT WRITTEN PERMISSION OF WELD PROJECTS IS PROHIBITED.

REVISIONS			
REV.	DESCRIPTION	DATE	APPROVED

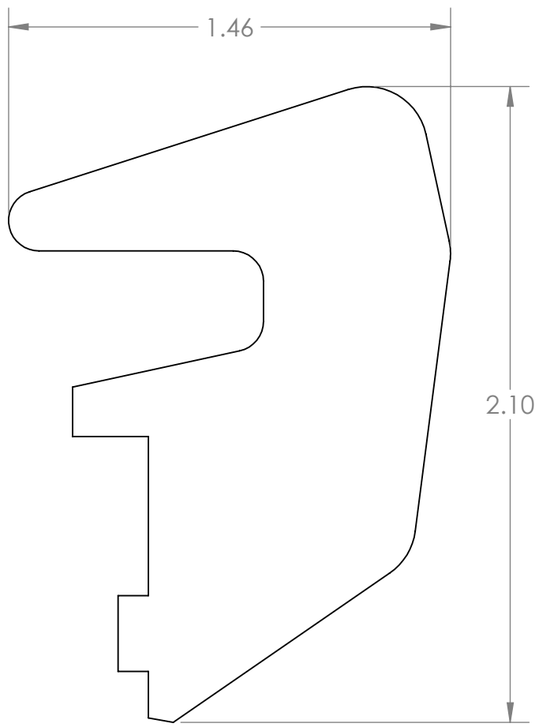

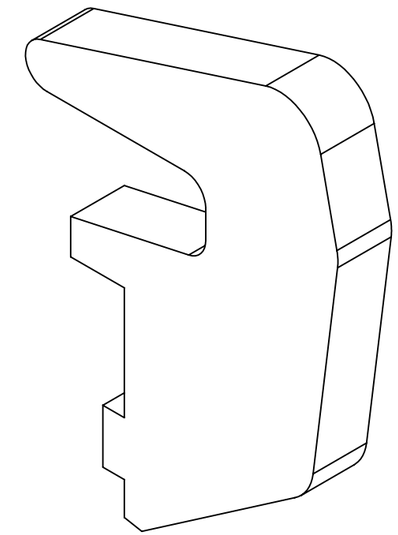

WELD PROJECTS
101 INDUSTRIAL CT, CONROE, TX 77301
PH: 281-238-9652

UNLESS OTHERWISE SPECIFIED
DIMENSIONS ARE IN INCHES
TOLERANCES:
FRACTIONAL ±1/16
ANGULAR: BEND ±1° MACH ±0.5°
DIMENSIONAL TOLERANCE ± 0.015
DO NOT SCALE DRAWING

	NAME	DATE
DRAWN	Noe F	10/15/25
CHECKED		
MFG. APPR.		
Q.A. APPR.		

COMMENTS :

PART # HAYB-068-000
P/N REV : A-1
DWG. VER : 1
SO# :

DESCRIPTION : Hay Bale Trailer - Chain Retainer Hook
MATERIAL : 0.25" ASTM A36 Steel
ROUTING :
CUSTOMER : STD. PRODUCT

PROPRIETARY AND CONFIDENTIAL : THE INFORMATION CONTAINED IN THIS DRAWING IS THE SOLE PROPERTY OF WELD PROJECTS. ANY REPRODUCTION, IN PART OR AS A WHOLE, WITHOUT WRITTEN PERMISSION OF WELD PROJECTS IS PROHIBITED.

REVISIONS			
REV.	DESCRIPTION	DATE	APPROVED

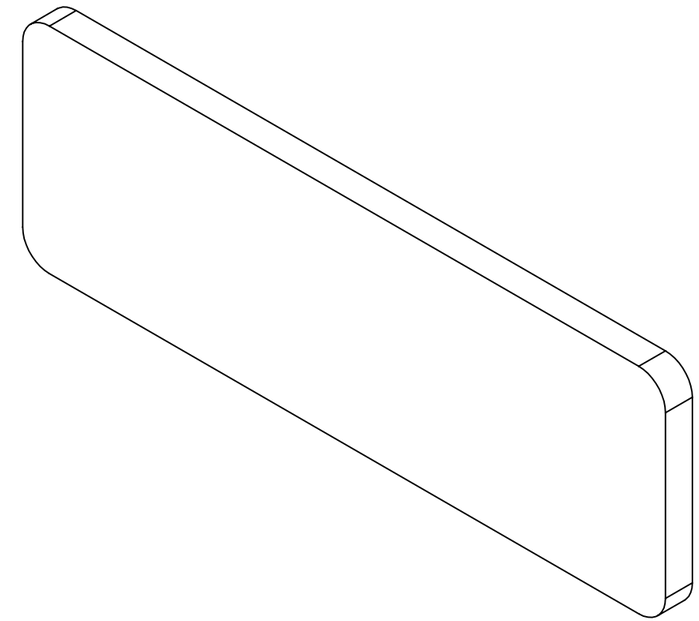

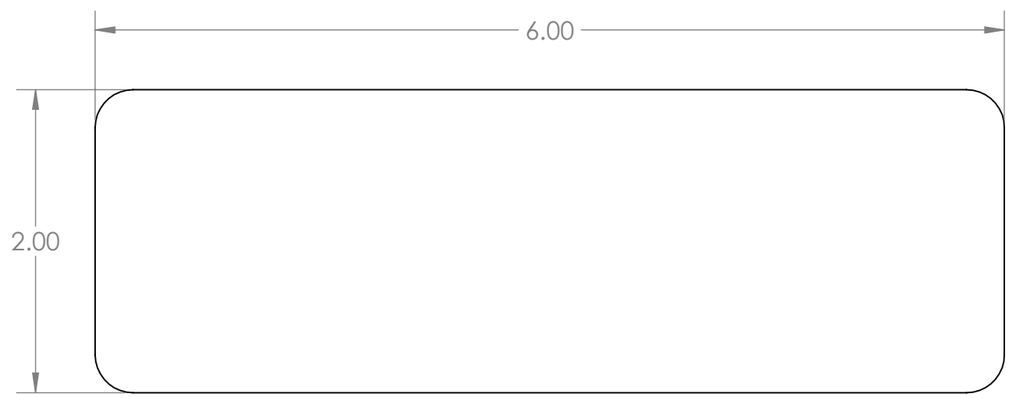

WELD PROJECTS
101 INDUSTRIAL CT, CONROE, TX 77301
PH: 281-238-9652

UNLESS OTHERWISE SPECIFIED
DIMENSIONS ARE IN INCHES
TOLERANCES:
FRACTIONAL ±1/16
ANGULAR: BEND ±1° MACH ±0.5°
DIMENSIONAL TOLERANCE ± 0.015
DO NOT SCALE DRAWING

	NAME	DATE
DRAWN	Noe F	10/15/25
CHECKED		
MFG. APPR.		
Q.A. APPR.		

COMMENTS :

PART # HAYB-069-000
P/N REV : A-1
DWG. VER : 1
SO# :

DESCRIPTION : Hay Bale Trailer - D Ring Reinforcement Plate
MATERIAL : 0.25" ASTM A36 Steel
ROUTING :
CUSTOMER : STD. PRODUCT

PROPRIETARY AND CONFIDENTIAL : THE INFORMATION CONTAINED IN THIS DRAWING IS THE SOLE PROPERTY OF WELD PROJECTS. ANY REPRODUCTION, IN PART OR AS A WHOLE, WITHOUT WRITTEN PERMISSION OF WELD PROJECTS IS PROHIBITED.

REVISIONS			
REV.	DESCRIPTION	DATE	APPROVED

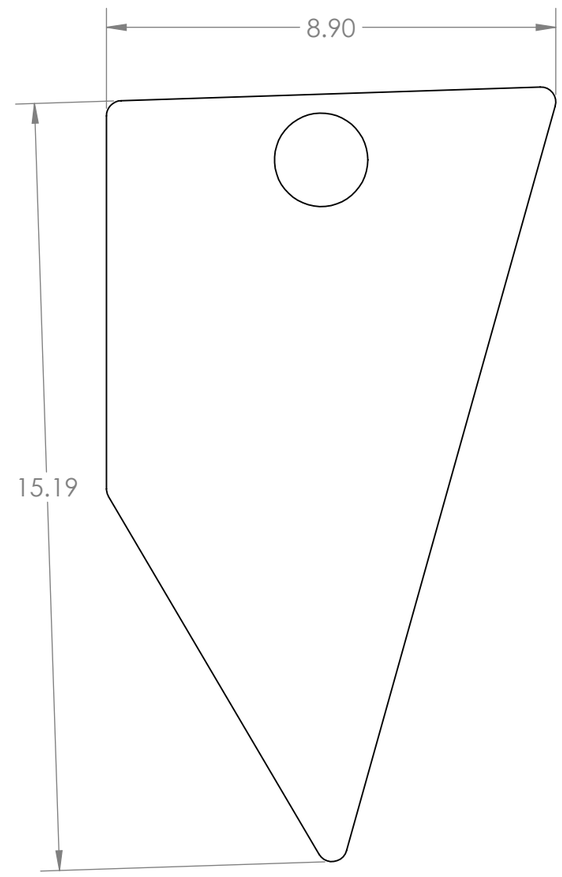

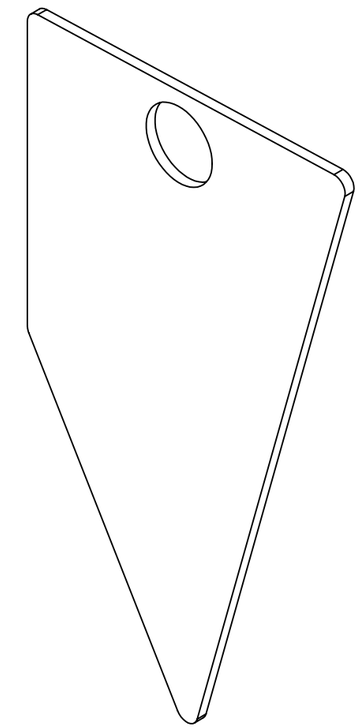

WELD PROJECTS
101 INDUSTRIAL CT, CONROE, TX 77301
PH: 281-238-9652

UNLESS OTHERWISE SPECIFIED
DIMENSIONS ARE IN INCHES
TOLERANCES:
FRACTIONAL ±1/16
ANGULAR: BEND ±1° MACH ±0.5°
DIMENSIONAL TOLERANCE ± 0.015
DO NOT SCALE DRAWING

	NAME	DATE
DRAWN	Noe F	10/15/25
CHECKED		
MFG. APPR.		
Q.A. APPR.		

COMMENTS :

PART # HAYB-070-000
P/N REV : A-1
DWG. VER : 1
SO# :

DESCRIPTION : Hay Bale Trailer - Scissor Upper Reinforcement Inside
MATERIAL : 0.25" ASTM A36 Steel
ROUTING :
CUSTOMER : STD. PRODUCT

PROPRIETARY AND CONFIDENTIAL : THE INFORMATION CONTAINED IN THIS DRAWING IS THE SOLE PROPERTY OF WELD PROJECTS. ANY REPRODUCTION, IN PART OR AS A WHOLE, WITHOUT WRITTEN PERMISSION OF WELD PROJECTS IS PROHIBITED.

REVISIONS			
REV.	DESCRIPTION	DATE	APPROVED

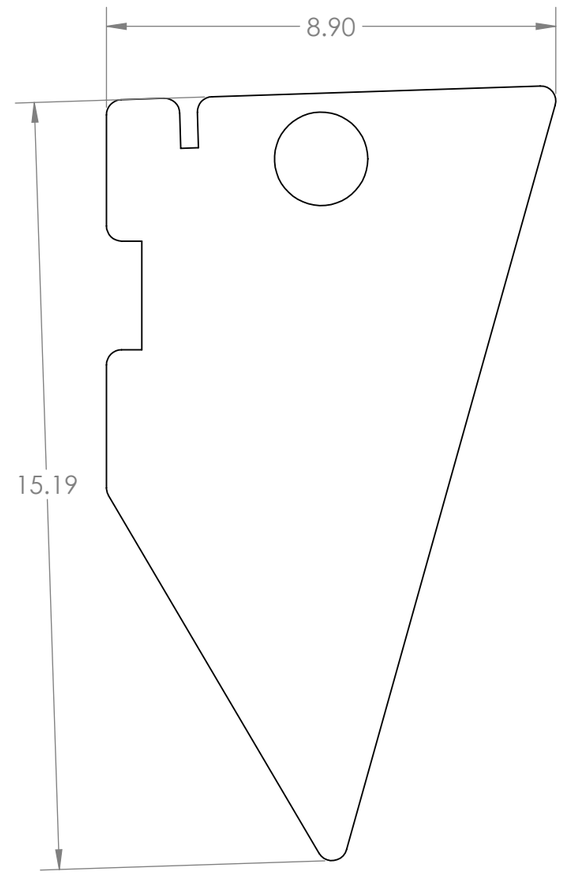

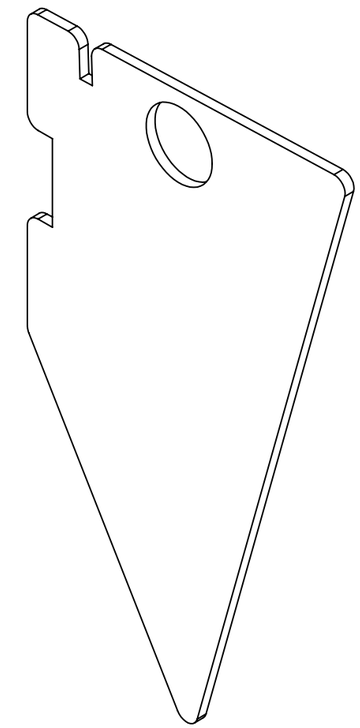

WELD PROJECTS
101 INDUSTRIAL CT, CONROE, TX 77301
PH: 281-238-9652

UNLESS OTHERWISE SPECIFIED
DIMENSIONS ARE IN INCHES
TOLERANCES:
FRACTIONAL ±1/16
ANGULAR: BEND ±1° MACH ±0.5°
DIMENSIONAL TOLERANCE ± 0.015
DO NOT SCALE DRAWING

	NAME	DATE
DRAWN	Noe F	10/15/25
CHECKED		
MFG. APPR.		
Q.A. APPR.		

COMMENTS :

PART # HAYB-070-001
P/N REV : A-1
DWG. VER : 1
SO# :

DESCRIPTION : Hay Bale Trailer - Scissor Upper Reinforcement Outside
MATERIAL : 0.25" ASTM A36 Steel
ROUTING :
CUSTOMER : STD. PRODUCT

PROPRIETARY AND CONFIDENTIAL : THE INFORMATION CONTAINED IN THIS DRAWING IS THE SOLE PROPERTY OF WELD PROJECTS. ANY REPRODUCTION, IN PART OR AS A WHOLE, WITHOUT WRITTEN PERMISSION OF WELD PROJECTS IS PROHIBITED.

REVISIONS			
REV.	DESCRIPTION	DATE	APPROVED

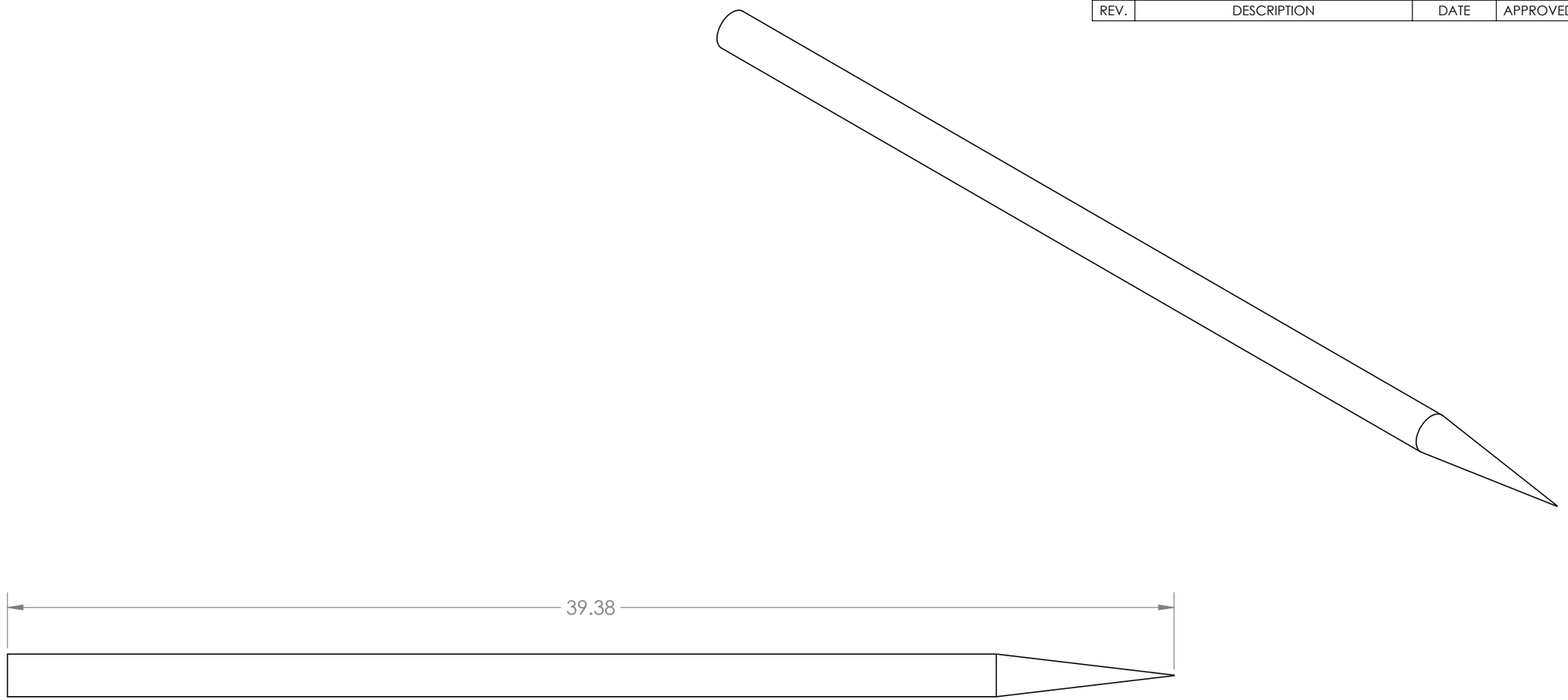

WELD PROJECTS
101 INDUSTRIAL CT, CONROE, TX 77301
PH: 281-238-9652

UNLESS OTHERWISE SPECIFIED
DIMENSIONS ARE IN INCHES
TOLERANCES:
FRACTIONAL ±1/16
ANGULAR: BEND ±1° MACH ±0.5°
DIMENSIONAL TOLERANCE ± 0.015
DO NOT SCALE DRAWING

	NAME	DATE
DRAWN	Noe F	10/15/25
CHECKED		
MFG. APPR.		
Q.A. APPR.		

COMMENTS :

PART # HAYB-071-000
P/N REV : A-1
DWG. VER : 1
SO# :

DESCRIPTION : Hay Bale Trailer - Skewer
MATERIAL : 1 7/16" Solid bar" ASTM A36 Steel
ROUTING :
CUSTOMER : STD. PRODUCT

PROPRIETARY AND CONFIDENTIAL : THE INFORMATION CONTAINED IN THIS DRAWING IS THE SOLE PROPERTY OF WELD PROJECTS. ANY REPRODUCTION, IN PART OR AS A WHOLE, WITHOUT WRITTEN PERMISSION OF WELD PROJECTS IS PROHIBITED.

REVISIONS			
REV.	DESCRIPTION	DATE	APPROVED

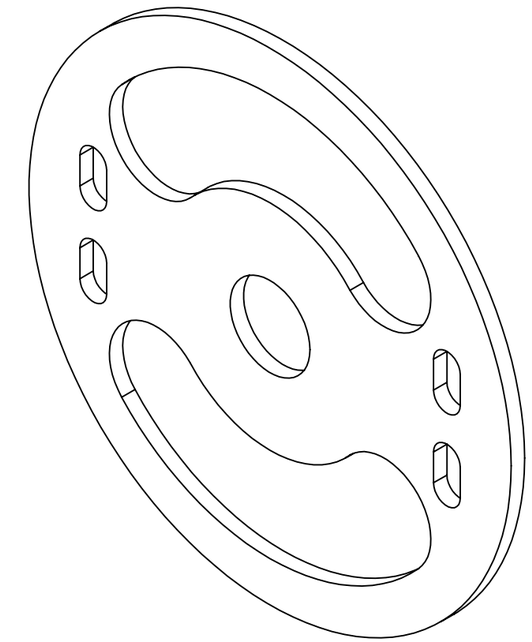

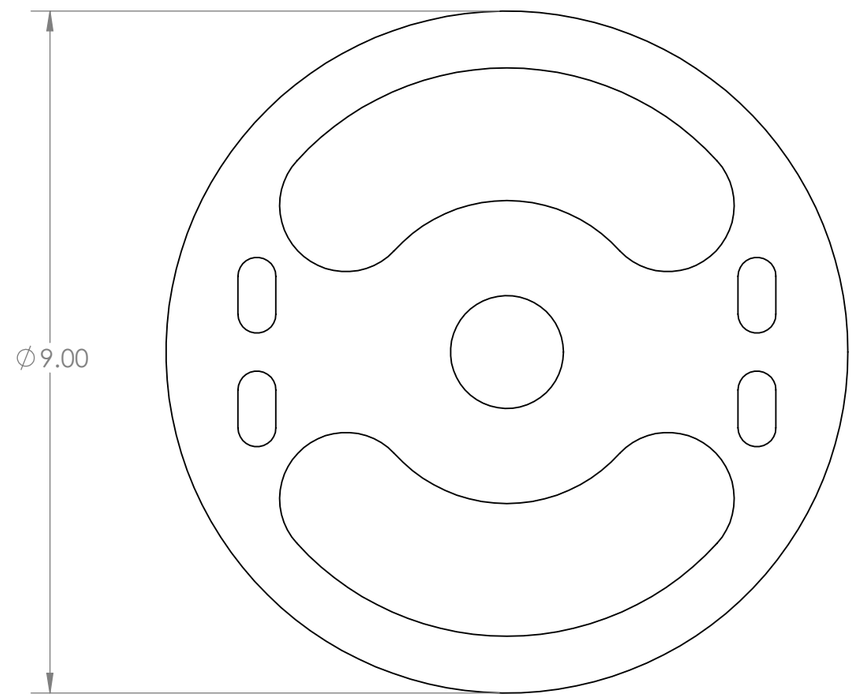

WELD PROJECTS
101 INDUSTRIAL CT, CONROE, TX 77301
PH: 281-238-9652

UNLESS OTHERWISE SPECIFIED
DIMENSIONS ARE IN INCHES
TOLERANCES:
FRACTIONAL ±1/16
ANGULAR: BEND ±1° MACH ±0.5°
DIMENSIONAL TOLERANCE ± 0.015
DO NOT SCALE DRAWING

	NAME	DATE
DRAWN	Noe F	10/15/25
CHECKED		
MFG. APPR.		
Q.A. APPR.		

COMMENTS :

PART # HAYB-072-000
P/N REV : A-1
DWG. VER : 1
SO# :

DESCRIPTION : Hay Bale Trailer - Skewer Handle
MATERIAL : 0.25" ASTM A36 Steel
ROUTING :
CUSTOMER : STD. PRODUCT

PROPRIETARY AND CONFIDENTIAL : THE INFORMATION CONTAINED IN THIS DRAWING IS THE SOLE PROPERTY OF WELD PROJECTS. ANY REPRODUCTION, IN PART OR AS A WHOLE, WITHOUT WRITTEN PERMISSION OF WELD PROJECTS IS PROHIBITED.

REVISIONS			
REV.	DESCRIPTION	DATE	APPROVED

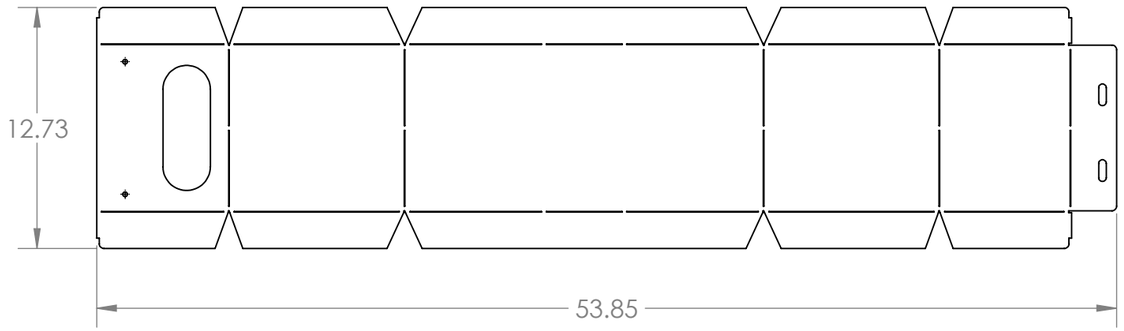

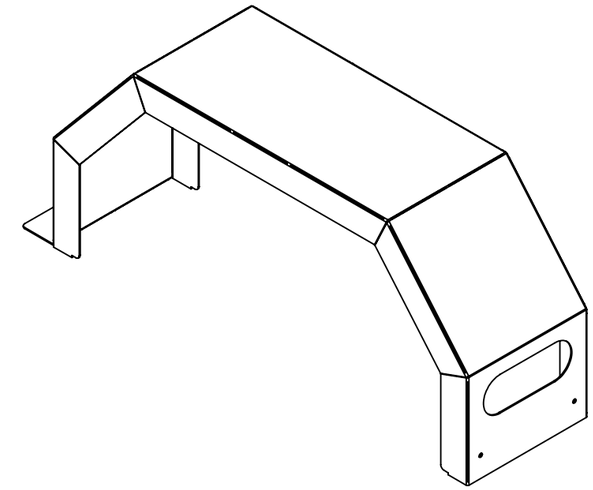

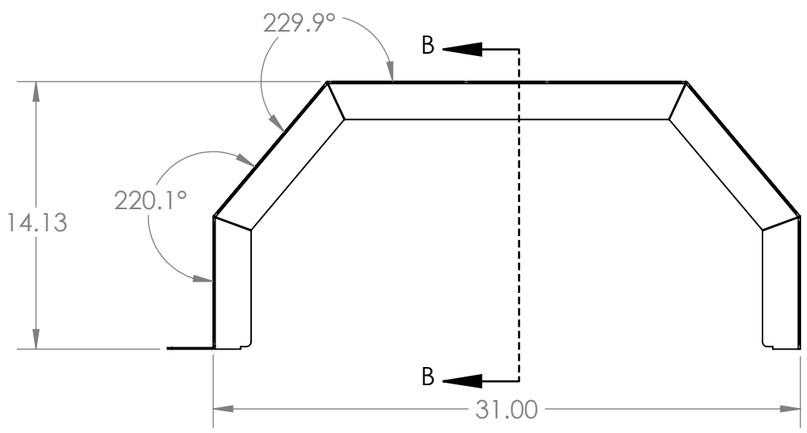

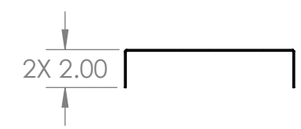

SECTION B-B

PART NEEDS TO BE BENT BY HAND
PART HAS A MIRROR VERSION

WELD PROJECTS
101 INDUSTRIAL CT, CONROE, TX 77301
PH: 281-238-9652

UNLESS OTHERWISE SPECIFIED
DIMENSIONS ARE IN INCHES
TOLERANCES:
FRACTIONAL ±1/16
ANGULAR: BEND ±1° MACH ±0.5°
DIMENSIONAL TOLERANCE ± 0.015
DO NOT SCALE DRAWING

	NAME	DATE
DRAWN	Noe F	10/15/25
CHECKED		
MFG. APPR.		
Q.A. APPR.		

COMMENTS :

PART # HAYB-073-000	DESCRIPTION : Hay Bale Trailer - Fender Right
P/N REV : A-1	MATERIAL : 0.075" ASTM A36 Steel
DWG. VER : 1	ROUTING :
SO# :	CUSTOMER : STD. PRODUCT

PROPRIETARY AND CONFIDENTIAL : THE INFORMATION CONTAINED IN THIS DRAWING IS THE SOLE PROPERTY OF WELD PROJECTS. ANY REPRODUCTION, IN PART OR AS A WHOLE, WITHOUT WRITTEN PERMISSION OF WELD PROJECTS IS PROHIBITED.

REVISIONS			
REV.	DESCRIPTION	DATE	APPROVED

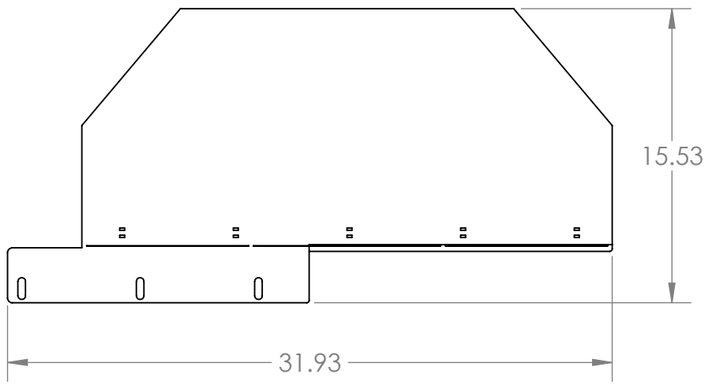

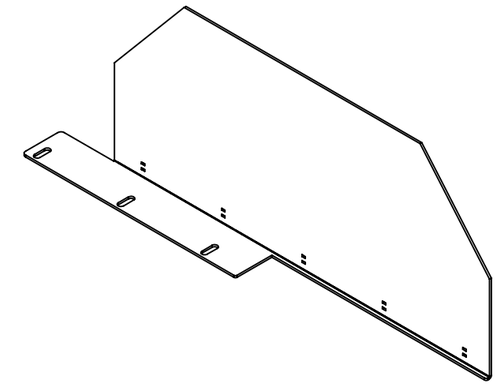

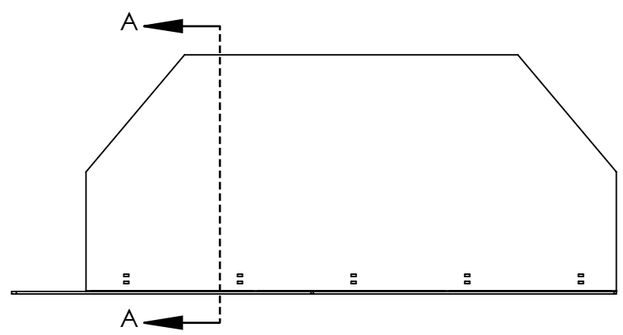

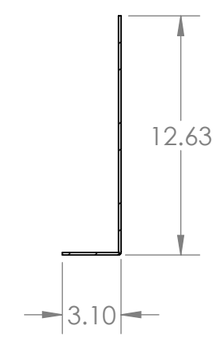

SECTION A-A

PART NEEDS TO BE BENT BY HAND
PART HAS A MIRROR VERSION

WELD PROJECTS
101 INDUSTRIAL CT, CONROE, TX 77301
PH: 281-238-9652

UNLESS OTHERWISE SPECIFIED
DIMENSIONS ARE IN INCHES
TOLERANCES:
FRACTIONAL ±1/16
ANGULAR: BEND ±1° MACH ±0.5°
DIMENSIONAL TOLERANCE ± 0.015
DO NOT SCALE DRAWING

	NAME	DATE
DRAWN	Noe F	10/15/25
CHECKED		
MFG. APPR.		
Q.A. APPR.		

COMMENTS :

PART # HAYB-073-002
P/N REV : A-1
DWG. VER : 1
SO# :

DESCRIPTION : Hay Bale Trailer - Fender Base - Right
MATERIAL : 0.1345" ASTM A36 Steel
ROUTING :
CUSTOMER : STD. PRODUCT

PROPRIETARY AND CONFIDENTIAL : THE INFORMATION CONTAINED IN THIS DRAWING IS THE SOLE PROPERTY OF WELD PROJECTS. ANY REPRODUCTION, IN PART OR AS A WHOLE, WITHOUT WRITTEN PERMISSION OF WELD PROJECTS IS PROHIBITED.

REVISIONS			
REV.	DESCRIPTION	DATE	APPROVED

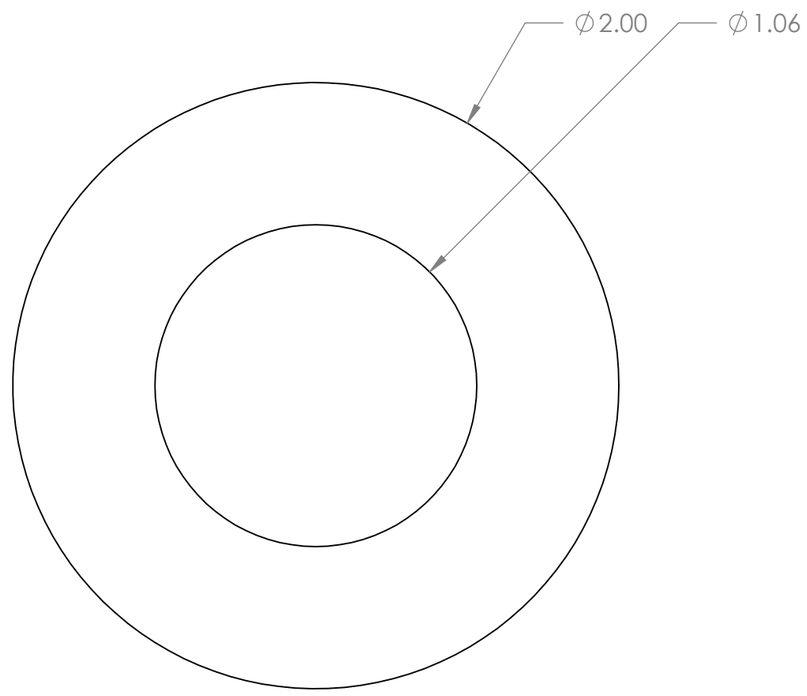

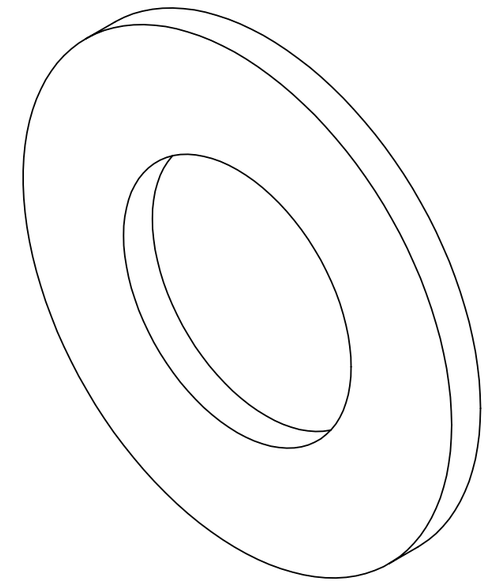

WELD PROJECTS
101 INDUSTRIAL CT, CONROE, TX 77301
PH: 281-238-9652

UNLESS OTHERWISE SPECIFIED
DIMENSIONS ARE IN INCHES
TOLERANCES:
FRACTIONAL ±1/16
ANGULAR: BEND ±1° MACH ±0.5°
DIMENSIONAL TOLERANCE ± 0.015
DO NOT SCALE DRAWING

	NAME	DATE
DRAWN	Noe F	10/15/25
CHECKED		
MFG. APPR.		
Q.A. APPR.		

COMMENTS :

PART # HAYB-074-000
P/N REV : A-1
DWG. VER : 1
SO# :

DESCRIPTION : Hay Bale Trailer - Steel Washer 1" ID, 2" OD
MATERIAL : 0.1345" 18-8 Stainless Steel
ROUTING :
CUSTOMER : STD. PRODUCT

PROPRIETARY AND CONFIDENTIAL : THE INFORMATION CONTAINED IN THIS DRAWING IS THE SOLE PROPERTY OF WELD PROJECTS. ANY REPRODUCTION, IN PART OR AS A WHOLE, WITHOUT WRITTEN PERMISSION OF WELD PROJECTS IS PROHIBITED.

BOOKLET REVISIONS TABLE

REV.	DATE	DESCRIPTION	AFFECTED PAGES	DESIGNER	REVIEW	APPROVED
A-1	10/20/25	Initial Release	All	Noe F	Mohit K	John P